M-Zert
Zertifiziertes QM-System
DIN EN ISO 9001
Zertifikat-Nr. 01017

All Stainless Steel Bourdon Tube Pressure Gauges

acc. to EN 837 for industrial applications

KOBOLD

measuring • monitoring • analysing

MAN-R

- Housing:
  63 mm, 100 mm, 160 mm
  (option: 80 mm)
- Connection:
  G¼ (63 mm housing)
  G½ (100,160 mm housing)
- Material
  Housing: stainless steel
  Connection: stainless steel
- Measuring ranges:
  -1 ... 0 bar ... 0 ... +1000 bar
- Accuracy class:
  1.0 (1.6 with 63 mm)
- Option: damping liquid, contacts, transmitter

P1

KOBOLD companies worldwide:
AUSTRALIA, AUSTRIA, BELGIUM, BULGARIA, CANADA, CHINA, CZECHIA, FRANCE, GERMANY, GREAT BRITAIN, HUNGARY, INDIA, INDONESIA, ITALY, MALAYSIA, MEXICO, NETHERLANDS, PERU, POLAND, REPUBLIC OF KOREA, RUSSIA, SPAIN, SWITZERLAND, THAILAND, TUNISIA, TURKEY, USA, VIETNAM

KOBOLD Messring GmbH
Nordring 22-24
D-65719 Hofheim/Ts.
Head Office:
+49(0)6192 299-0
+49(0)6192 23398
info.de@kobold.com
www.kobold.com

Application

The KOBOLD all stainless steel pressure gauges are ideal for the hard conditions and the resulting high demands on pressure measurement in production facilities in chemical industry and other comparable areas. Resistance to aggressive media and environments is achieved by using high-graded materials such as stainless steel both for the movement and the housing. They can be used for liquid or gaseous substances which do not crystallize and are not highly viscous. The extensive range of options allows the user to adapt the instruments to his own special requirements. All the pressure gauges comply with general international guidelines and take account of standard as well as application-specific requirements. They are the result of the over 70 years experience we have in building pressure gauges.

Measuring principle

Mechanical pressure measurement uses the principle of an elastic measuring element, which generates a precisely defined, reproducible deflection when subjected to pressure. The motion works convert this into a rotary motion of the pointer. The pressure at the measuring element can be read on the scale of the dial.

Unifilar drawing

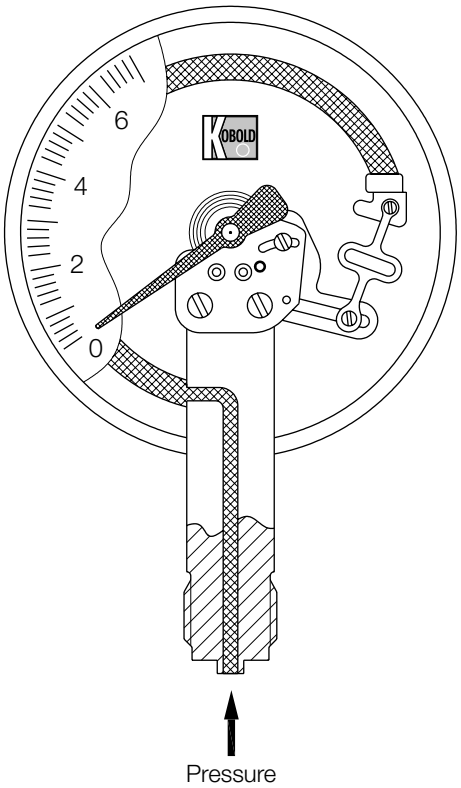

Housing

The following housing diameters are available:

63 mm, 100 mm and 160 mm. The housing material is stainless steel. The gauges can also be produced in nominal size 80 mm.

Installation

The gauges are most often installed straight into the customer's screw necks. Depending on the required installation the instruments can be supplied with a panel clamp, triangular front ring or mounting flange.

Connection

The gauges with 63 and 80 mm housing diameter are supplied with a G¼ connecting thread as standard, gauges with housing diameter of 100 mm and above with G½ connecting thread. The connection is made of stainless steel. Diaphragm seals can be mounted for viscous, crystallising, aggressive materials or higher temperature materials to prevent the material being measured from penetrating into the measuring system. Other connection types are available on request.

Measuring ranges

The measuring ranges are graduated according to DIN recommendations and lie between -1...0 bar and 0...1000 bar. Other scales with measuring ranges up to 4000 bar or scales in PSI, Pa or with your company logo are available on request.

Damping liquid

Pressure gauges with liquid filling are used in locations with high alternating dynamic loads, strong vibrations and pulses. The filling ensures easy readability through steady pointer movement even when subjected to extreme loading and heavy vibration. The lubricating effect of the glycerine also keeps wear to a minimum. Glycerine is always used as a matter of principle. In gauges with a contact or an electrical measuring transducer, liquid paraffin is used as a non-conductive alternative. Silicone fillings of various viscosities are also optionally available.

Contacts

For monitoring the system pressure, gauges with 100 mm or 160 mm diameter can be fitted with up to four limit contacts. Slow action, magnetic spring, inductive and pneumatic contacts are also available (see data sheet »Contact Fittings for Pressure Gauges« MAN-..S/M/I/P).

Fields of application

- Chemical and petrochemical industries
- Plastics and paper-manufacturing industries
- Food and beverage industries
- Machine and plant construction

1/04 - 2021

Technical Details

* Special filling: Paraffin oil for higher temperatures (on request) or with contacts.

Connection/Housing		**NG 63**		**NG 100**		**NG 160**	
		Model					
Bottom connection 	**MAN-...**	**...RD25...**	**...RD75...**	**...RF26...**	**...RF76...**	**...RG26...**	**...RG76...**
Back connection 	**MAN-...**	**...RD27...** centrical	**...RD77...** centrical	**...RF28...** eccentrical	**...RF78...** eccentrical	**...RG28...** eccentrical	**...RG78...** eccentrical
Triangular front ring Back connection 	**MAN-...**	**...RD27B...** centrical	**...RD77B...** centrical	**...RF28K...** eccentrical	-	**...RG28K...** eccentrical	**...RG78K...** eccentrical
Front flange Back connection 	**MAN-...**	**...RD27V...** centrical	**...RD77V...** centrical	**...RF28V...** eccentrical	**...RF78V...** eccentrical	**...RG28V...** eccentrical	**...RG78V...** eccentrical
Accuracy class		1.6		1.0			
Housing material		stainless steel 1.4301					
Filling		-	glycerine*	-	glycerine*	-	glycerine*
Bezel		stainless steel 1.4301					
Pointer		aluminium, black anodized					
Movement		stainless steel					
Throttle D=		from 60 bar D = 0.5 mm					
Glass		Polyamide		safety glass			
Measuring element		stainless steel 1.4571					
Protection		IP 65	IP 67	IP 65	IP 67	IP 65	IP 67
Overrange protection		none		short time 1.3 times (from 1000 bar 1.1x) of full scale			
Weight		see table					
Ambient temperature		-20 ... +80 °C	-20 ... +60 °C	-20 ... +80 °C	-20 ... +60 °C	-20 ... +80 °C	-20 ... +60 °C
Connection		stainless steel 1.4571					
Thread connection		G ¼ male		G ½ male			
Max. medium temperature		80 °C					
Contacts		none		max. 4 cont.	max. 3 cont.	max. 4 cont.	max. 3 cont.
Indicating range		**Code of indicating range**					
-0.6 ... 0 bar		-	-	..AC	..AC	..AC	..AC
-1 ... 0 bar		..AD	..AD	..AD	..AD	..AD	..AD
-1 ... +0.6 bar		..A0	..A0	..A0	..A0	..A0	..A0
-1 ... +1.5 bar		..A1	..A1	..A1	..A1	..A1	..A1
-1 ... +3 bar		..A2	..A2	..A2	..A2	..A2	..A2
-1 ... +5 bar		..A3	..A3	..A3	..A3	..A3	..A3
-1 ... +9 bar		..A4	..A4	..A4	..A4	..A4	..A4
-1 ... +15 bar		..A5	..A5	..A5	..A5	..A5	..A5
0...0.6 bar		-	-	-	..B1	..B1	..B1
0...1 bar		..B2	..B2	..B2	..B2	..B2	..B2
0...1,6 bar		..B3	..B3	..B3	..B3	..B3	..B3
0...2,5 bar		..B4	..B4	..B4	..B4	..B4	..B4
0...4 bar		..B5	..B5	..B5	..B5	..B5	..B5
0...6 bar		..B6	..B6	..B6	..B6	..B6	..B6
0...10 bar		..B7	..B7	..B7	..B7	..B7	..B7
0...16 bar		..B8	..B8	..B8	..B8	..B8	..B8
0...25 bar		..B9	..B9	..B9	..B9	..B9	..B9
0...40 bar		..B0	..B0	..B0	..B0	..B0	..B0
0...60 bar		..C1	..C1	..C1	..C1	..C1	..C1
0...100 bar		..C2	..C2	..C2	..C2	..C2	..C2
0...160 bar		..C3	..C3	..C3	..C3	..C3	..C3
0...250 bar		..C4	..C4	..C4	..C4	..C4	..C4
0...400 bar		..C5	..C5	..C5	..C5	..C5	..C5
0...600 bar		..C6	..C6	..C6	..C6	..C6	..C6
0...1000 bar		..D7	..D7	..D7	..D7	..D7	..D7

Dimensions

Bottom connection

Code	NG	A	B without contact	B 1 or 2 contacts	B 3 contacts	B 4 contacts	C	d	D	E	H	SW	W	X
MAN-RD 25/75	63 mm	6	31	-	-	-	13	62	68	55	-	14	-	-
MAN-RF 26/76	100 mm	17	48	82	97	110	15	100	101	86.5	54	22	0	88
MAN-RG 26/76	160 mm	21	50	101	120	120	15	159	162	117	56	22	0	118

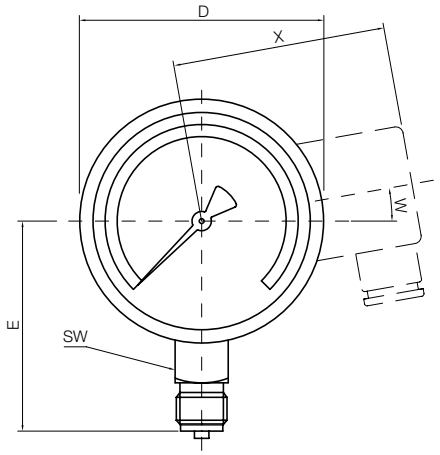

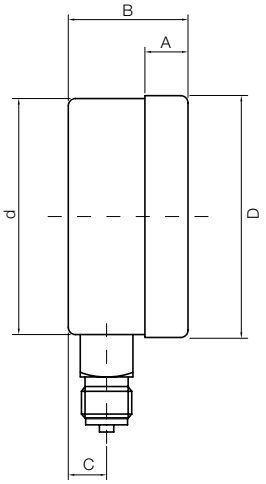

Back connection

Code	NG	A	B without contact	B 1 or 2 contacts	B 3 contacts	B 4 contacts	C	d	D	E	H	SW	W	X
MAN-RD 27/77	63 mm	6	28	-	-	-	26	63	68	0	-	14	-	-
MAN-RF 28/78	100 mm	17	49	82	97	110	34	100	101	32.5	54	22	0	88
MAN-RG 28/78	160 mm	21	50	101	120	120	34	159	162	32.5	56	22	0	118

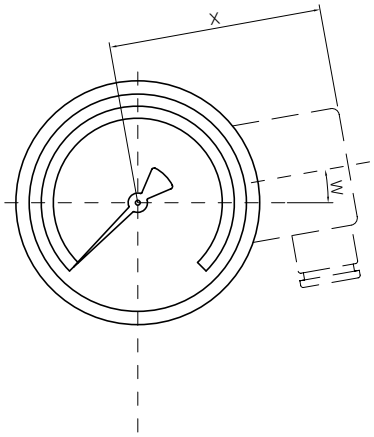

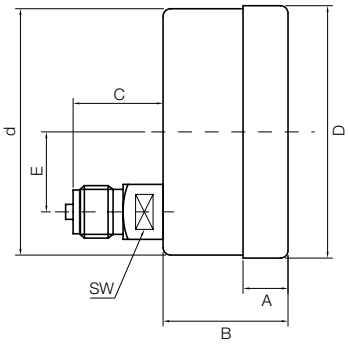

1/04 - 2021

Dimensions (continued)

Triangular front ring with clamp

Code	NG	A	B without contact	B 1 or 2 contacts	B 3 contacts	B 4 contacts	C	d	D	E	SW	W	X
MAN-RD 27/77	63 mm	6	26	-	-	-	26	62	68	0	14	-	-
MAN-RF 28 K	100 mm	5	41	88	105	105	34	101	107	32.5	22	0	42
MAN-RG 28/78 K	160 mm	5	44	98	145	145	30	160	162	50	22	0	42

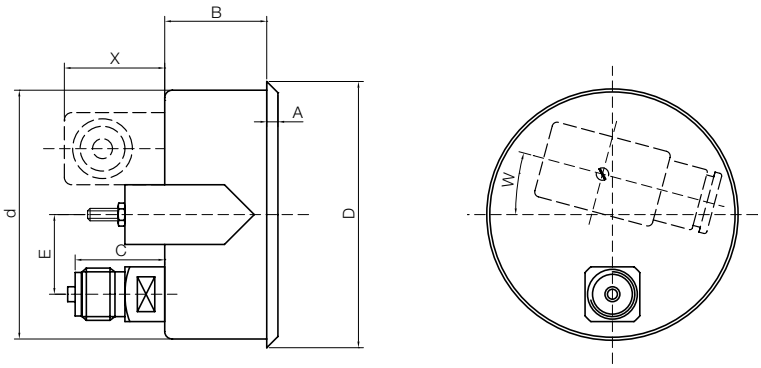

Front flange

Code	NG	A	B without contact	B 1 or 2 contacts	B 3 contacts	B 4 contacts	C	d	D	D2	E	LK	S	SW	W	X
MAN-RD 27/77 V	63 mm	7	24	-	-	-	26	62	68	85	0	75	1	14	-	-
MAN-RF 28/78 V	100 mm	6	43	86	92	105	34	104	101	132	32.5	116	2	22	15	42
MAN-RG 28/78 V	160 mm	6	43	95	110	110	34	164	161	196	32.5	178	2	22	15	42

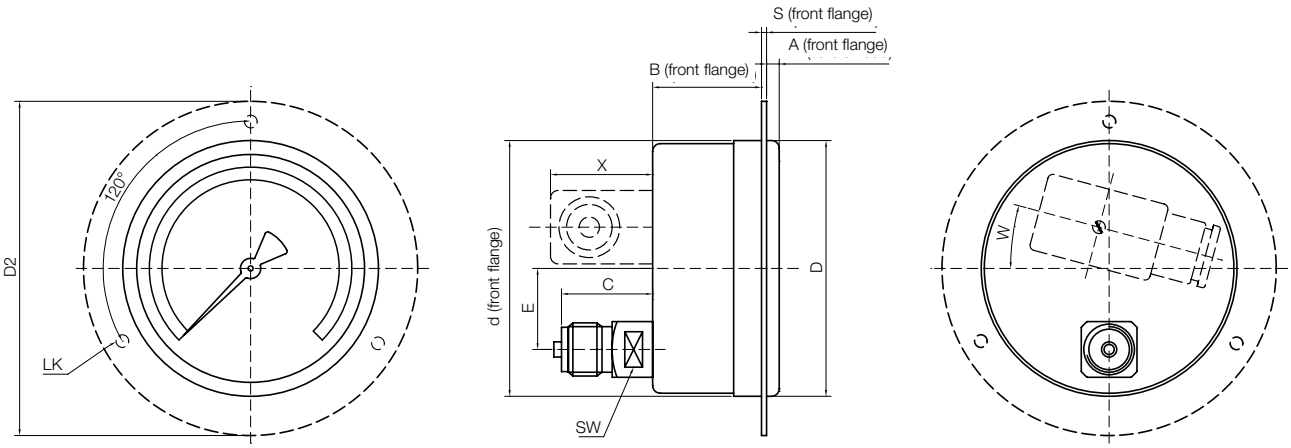

Weights

		without contact	up to 2 contacts	3 contacts	4 contacts
Code	**Housing-filling**	**Weight [kg]**	**Weight [kg]**	**Weight [kg]**	**Weight [kg]**
NG 63					
MAN-RD 25	without	0.13	-	-	-
MAN-RD 27	without	0.12	-	-	-
MAN-RD 27B	without	0.15	-	-	-
MAN-RD 27V	without	0.15	-	-	-
MAN-RD 75	with	0.21	-	-	-
MAN-RD 77	with	0.20	-	-	-
MAN-RD 77B	with	0.23	-	-	-
MAN-RD 77V	with	0.23	-	-	-
NG-100					
MAN-RF 26	without	0.5	0.7	0.75	0.8
MAN-RF 28	without	0.5	0.7	0.75	0.8
MAN-RF 28K	without	0.6	0.8	0.85	0.9
MAN-RF 28V	without	0.6	0.8	0.85	0.9
MAN-RF 76	with	0.8	1.2	1.3	-
MAN-RF 78	with	0.8	1.2	1.3	-
MAN-RF 78 V	with	0.9	1.3	1.4	-
NG 160					
MAN-RG 26	without	1.0	1.3	1.4	1.5
MAN-RG 28	without	1.0	1.3	1.4	1.5
MAN-RG 28 K	without	1.1	1.4	1.5	1.6
MAN-RG 28 V	without	1.1	1.5	1.6	1.7
MAN-RG 76	with	1.8	2.8	3.2	-
MAN-RG 78	with	1.8	2.8	3.2	-
MAN-RG 78 K	with	1.9	2.9	3.3	-
MAN-RG 78 V	with	1.9	2.9	3.3	-

1/04 - 2021