Zertifiziertes QM-System
DIN EN ISO 9001
Zertifikat-Nr. 01017

All-Metal Flow Meters and Switches

for liquids

measuring • monitoring • analysing

SMV

- Measuring range:
  0.1 - 1.0 ... 10 - 110 l/min
  water
- Accuracy:
  ±5% of full scale
- p_{max}: 350 bar; t_{max}: 100 °C
- Connection:
  G ¼ ... G 1 ¼ female
- Material:
  brass or stainless steel

S2

KOBOLD companies worldwide:

AUSTRALIA, AUSTRIA, BELGIUM, BULGARIA, CANADA, CHINA, CZECHIA, FRANCE, GERMANY, GREAT BRITAIN, HUNGARY, INDIA, INDONESIA, ITALY, MALAYSIA, MEXICO, NETHERLANDS, PERU, POLAND, REPUBLIC OF KOREA, SPAIN, SWITZERLAND, THAILAND, TUNISIA, TURKEY, USA, VIETNAM

KOBOLD Messring GmbH
Nordring 22-24
D-65719 Hofheim/Ts.
Head Office:
+49(0)6192 299-0
+49(0)6192 23398
info.de@kobold.com
www.kobold.com

Opis działania

The proven KOBOLD flow meters and switches model SMV-... are based on the principle of the well-known floattype flowmeters except for the conventional tapering measuring tube.

These instruments are provided instead with a cylindrical flow tube with conical slots around the periphery.

This eliminates the usual problems of guiding the cylindrical float within a tapering measuring glass. The novel design including the provision of an appropriately dimensioned annular gap of constant width between the float and the flow tube has enabled the sensitivity to dirt to be considerably reduced.

The float comprises permanent magnets actuating a bistable reed contact external to the flow circuit, that is, the flowing medium is hermetically separated from the electrical contact. In addition it is embedded in a height-adjustable switch housing thus ensuring that the contact cannot be damaged even by an aggressive atmosphere.

As the medium enters the instrument the float rises. Once its magnetic field reaches the contact tips of the reed switch the contact closes. As the flow increases the float rises further until it reaches its stop. This prevents the float from going beyond the contact range of the magnetic operating tube, that is, the contact remains closed thus ensuring bistable switching.

With the models SMV-2... and SMV-3... the magnetic field also activates an external, that is, hermetically separated indicator, as a result of which flows are measured accurately even at high operating pressures.

The magnetic field and the indicator are designed so as to ensure that the pointer follows even abrupt changes in flow rate.

Applications

- Lubrication circuits
- Paper-making machines
- Machine tools
- Glass-melting tanks
- Cooling circuits
- Welding machines
- Induction furnaces
- Pumps

Technical Details

Housing:	SMV-x1..:	brass, Ms 58
	SMV-x2..:	stainless steel, 1.4301
Connections:	SMV-x1..:	brass, Ms 58
	SMV-x2..:	stainless steel, 1.4301
Float:	SMV-x1..:	brass, Ms 58
	SMV-x101:	PP
	SMV-x2..:	stainless steel, 1.4301
	SMV-x201:	PVDF
Nozzle:	SMV-x1..:	brass, Ms 58
	SMV-x2..:	stainless steel, 1.3955
Seals:	SMV-x1..:	NBR
	SMV-x2..:	FPM
Max. temperature:	100 °C	
	SMV-..01..:	70 °C
Max. pressure:	SMV-..01..:	16 bar
	SMV-x1..:	250 bar
	SMV-x2..:	350 bar
Installation position:	vertical, flow in the upward direction	
Accuracy:	± 5% of full scale	
Repeatability:	≤1%	

Contacts with SMV-1..., SMV-3... without ATEX

Electrical connection:	valve connector DIN EN 175301-803
Electrical switching values:	N/O contact max. 250 $V_{AC/DC}$ / 1.5 A / 100 W / 100 VA changeover contact max. 250 $V_{AC/DC}$ / 1 A / 30 W / 60 VA N/O contact and changeover contact (cCSAus) max. 230 V_{DC} / 0.26 A / 60 W, 60 V_{DC} / 1 A / 60 W, max. 240 V_{AC} / 0.42 A / 100 W, 100 V_{AC} / 1 A / 100 W

No responsibility taken for errors;
subject to change without prior notice.

2/07 - 2025

Contacts with SMV-1..., SMV-3... use in hazardous areas

Electrical connection:	2 m PVC cable (option F0), all other models plug acc. DIN EN 175301-803
Mechanics:	The apparatus can be used as follows in explosive atmospheres in accordance with the applicable erection regulations on machines, devices and plants, such as e.g. EN 1127-1, EN 60079-14 etc.: a) In Zone 1 (gas hazard, category 2G) in the explosion groups IIA, IIB and IIC b) In Zone 2 (gas hazard, category 3G) in the explosion groups IIA, IIB and IIC c) In Zone 21 (dust hazard, category 2D) in the explosion groups IIIA and IIIB d) In Zone 22 (dust hazard, category 3D) in the explosion groups IIIA and IIIB
ATEX contact ...F0:	Ex II 2 G Ex mb IIC T6 Gb Ex II 2 D Ex mb IIIC T80 °C Db max. 250 V_{AC}/1,5 A/100 VA IECEx BVS 07.0007X
ATEX N/O contact type 41R57 ...G0 and GG:	Ex II 3 G Ex ic IIC T4 Gc Ex II 3 D Ex ic IIIC T125 °C Dc -20 °C ≤ Ta ≤ 80 °C max. 250 $V_{AC/DC}$/1,5 A/100 W/100 VA
ATEX changeover contact type 41R57U ...H0 and HH:	Ex II 3 G Ex ic IIC T4 Gc Ex II 3 D Ex ic IIIC T125 °C Dc -20 °C ≤ Ta ≤ 80 °C max. 250 $V_{AC/DC}$/1 A/30 W/60 VA
Hysteresis:	approx. 3.5 mm float movement 6 - 10 mm with ATEX contact
Protection:	IP 65 (electr. contact) IP 54 (side indicator)

No responsibility taken for errors;
subject to change without prior notice.

Order Details Flow Switches with 1 Contact Model: SMV-1... (Example: SMV-1101H R0 R08)

Measuring range l/min water	Pressure loss Δ P (bar)	Float according to version Brass	Float according to version St. steel	Brass	Stainless steel	Contact	Connection female thread	
0.1 ... 1	0.02	PP	PVDF	**SMV-1101H...**	**SMV-1201H...**	**..R0..** = 1 N/O contact **..U0..** = 1 changeover contact **..F0..**[2] = 1 Ex N/O contact 2 m cable (5 m/10 m on request) **..C0..** = 1 N/O contact (cCSAus) **..D0..** = 1 changeover contact (cCSAus) **..G0..** = 1 ATEX N/O contact (model 41R57) **..H0..** = 1 ATEX changeover contact (model 41R57U) **..RR..** = 2 N/O contact **..UU..** = 2 changeover contact **..CC..** = 2 N/O contact (cCSAus) **..DD..** = 2 changeover contact (cCSAus) **..GG..** = 2 ATEX N/O contact (model 41R57) **..HH..** = 2 ATEX changeover contact (model 41R57U)	**..R08** = G ¼ **..R15** = G ½	**..N08** = ¼" NPT **..N15** = ½" NPT
0.15 ... 1.7	0.04	brass, nickel-pl.	st. steel	**SMV-1103H...**	**SMV-1203H...**			
1 ... 4.5	0.04	st. steel	st. steel	**SMV-1105H...**	**SMV-1205H...**			
1 ... 7	0.11	brass, nickel-pl.	st. steel	**SMV-1107H...**	**SMV-1207H...**			
1 ... 9	0.12	st. steel	st. steel	**SMV-1109H...**	**SMV-1209H...**			
2 ... 14	0.18	st. steel	st. steel	**SMV-1111H...**	**SMV-1211H...**			
2.5 ... 20[1]	0.06	brass, nickel-pl.	st. steel	**SMV-1113H...**	**SMV-1213H...**			
3 ... 45	0.22	brass, nickel-pl.	st. steel	**SMV-1115H...**	**SMV-1215H...**		**..R20** = G ¾ **..R25** = G 1	**..N20** = ¾" NPT
3.5 ... 50	0.4	brass, nickel-pl.	st. steel	**SMV-1117H...**	**SMV-1217H...**			
10 ... 110	0.3	st. steel	st. steel	**SMV-1119H...**	**SMV-1219H...**		**..R32** = G 1 ¼	**..N32** = 1 ¼" NPT

[1] SMV-...13H & ¼" connection: Measuring range 2.5 ... 18 l/min water [2] Not for SMV-xx19

Order Details Flow Meter Model: SMV-2... (Example: SMV-2109H 00 R15)

Measuring range l/min water	Pressure loss Δ P (bar)	Float according to version Brass	Float according to version St. steel	Brass	Stainless steel	Contact	Connection female thread	
0.1 ... 1	0.02	PP	PVDF	**SMV-2101H...**	**SMV-2201H...**	**..00..** = without contact	**..R08** = G ¼ **..R15** = G ½	**..N08** = ¼" NPT **..N15** = ½" NPT
0.15 ... 1.7	0.04	brass, nickel-pl.	st. steel	**SMV-2103H...**	**SMV-2203H...**			
1 ... 4.5	0.04	st. steel	st. steel	**SMV-2105H...**	**SMV-2205H...**			
1 ... 7	0.11	brass, nickel-pl.	st. steel	**SMV-2107H...**	**SMV-2207H...**			
1 ... 9	0.12	st. steel	st. steel	**SMV-2109H...**	**SMV-2209H...**			
2 ... 14	0.18	st. steel	st. steel	**SMV-2111H...**	**SMV-2211H...**			
2.5 ... 20*	0.06	brass, nickel-pl.	st. steel	**SMV-2113H...**	**SMV-2213H...**			
3 ... 45	0.22	brass, nickel-pl.	st. steel	**SMV-2115H...**	**SMV-2215H...**		**..R20** = G ¾ **..R25** = G 1	**..N20** = ¾" NPT
3.5 ... 50	0.4	brass, nickel-pl.	st. steel	**SMV-2117H...**	**SMV-2217H...**			
10 ... 110	0.3	st. steel	st. steel	**SMV-2119H...**	**SMV-2219H...**		**..R32** = G 1 ¼	**..N32** = 1 ¼" NPT

* SMV-...13H & ¼" connection: Measuring range 2.5 ... 18 l/min water

Order Details Flow Meter and Switches with 1 Contact Model: SMV-3... (Example: SMV-3205H R0 R08)

Measuring range l/min water	Pressure loss Δ P (bar)	Float according to version Brass	Float according to version St. steel	Brass	Stainless steel	Contact	Connection female thread	
0.1 ... 1	0.02	PP	PVDF	**SMV-3101H...**	**SMV-3201H...**	**..R0..** = 1 N/O contact **..U0..** = 1 changeover contact **..F0..**[2] = 1 Ex N/O contact 2 m cable (5 m/10 m on request) **..C0..** = 1 N/O contact (cCSAus) **..D0..** = 1 changeover contact (cCSAus) **..G0..** = 1 ATEX N/O contact (model 41R57) **..H0..** = 1 ATEX changeover contact (model 41R57U) **..RR..** = 2 N/O contact **..UU..** = 2 changeover contact **..CC..** = 2 N/O contact (cCSAus) **..DD..** = 2 changeover contact (cCSAus) **..GG..** = 2 ATEX N/O contact (model 41R57) **..HH..** = 2 ATEX changeover contact (model 41R57U)	**..R08** = G ¼ **..R15** = G ½	**..N08** = ¼" NPT **..N15** = ½" NPT
0.15 ... 1.7	0.04	brass, nickel-pl.	st. steel	**SMV-3103H...**	**SMV-3203H...**			
1 ... 4.5	0.04	st. steel	st. steel	**SMV-3105H...**	**SMV-3205H...**			
1 ... 7	0.11	brass, nickel-pl.	st. steel	**SMV-3107H...**	**SMV-3207H...**			
1 ... 9	0.12	st. steel	st. steel	**SMV-3109H...**	**SMV-3209H...**			
2 ... 14	0.18	st. steel	st. steel	**SMV-3111H...**	**SMV-3211H...**			
2.5 ... 20[1]	0.06	brass, nickel-pl.	st. steel	**SMV-3113H...**	**SMV-3213H...**			
3 ... 45	0.22	brass, nickel-pl.	st. steel	**SMV-3115H...**	**SMV-3215H...**		**..R20** = G ¾ **..R25** = G 1	**..N20** = ¾" NPT
3.5 ... 50	0.4	brass, nickel-pl.	st. steel	**SMV-3117H...**	**SMV-3217H...**			
10 ... 110	0.3	st. steel	st. steel	**SMV-3119H...**	**SMV-3219H...**		**..R32** = G 1 ¼	**..N32** = 1 ¼" NPT

[1] SMV-...13H & ¼" connection: Measuring range 2.5 ... 18 l/min water [2] Not for SMV-xx19

No responsibility taken for errors;
subject to change without prior notice.

2/07 - 2025

Order Details and Dimensions

1. Flow switches with 1 contact model: SMV-1...

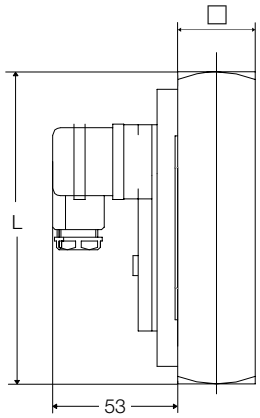

Model	Square [mm]	Thread G	L [mm]	Weight [kg]
SMV-..01H	30 x 30	¼ (½*)	132 (136*)	0.9
SMV-..03H	30 x 30	¼ (½)	132 (136)	0.9
SMV-..05H	30 x 30	¼ (½)	132 (136)	0.9
SMV-..07H	30 x 30	¼ (½)	132 (136)	0.9
SMV-..09H	30 x 30	¼ (½)	132 (136)	0.9
SMV-..11H	30 x 30	¼ (½)	132 (136)	0.9
SMV-..13H	30 x 30	¼ (½)	132 (136)	0.9
SMV-..15H	40 x 40	¾ (1)	156 (150)	1.7
SMV-..17H	40 x 40	¾ (1)	156 (150)	1.7
SMV-..19H	50 x 50	1 ¼	165	2.9

* With NPT-thread

2. Flow meter model: SMV-2...

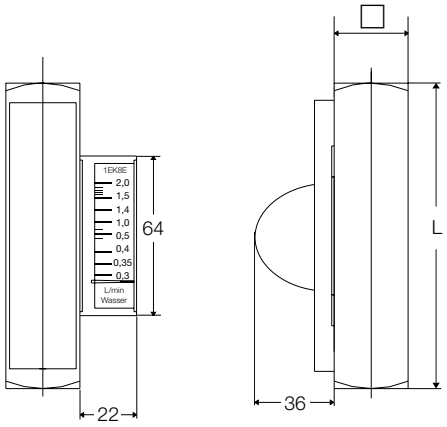

Model	Square [mm]	Thread G	L [mm]	Weight [kg]
SMV-..01H	30 x 30	¼ (½*)	132 (136*)	0.9
SMV-..03H	30 x 30	¼ (½)	132 (136)	0.9
SMV-..05H	30 x 30	¼ (½)	132 (136)	0.9
SMV-..07H	30 x 30	¼ (½)	132 (136)	0.9
SMV-..09H	30 x 30	¼ (½)	132 (136)	0.9
SMV-..11H	30 x 30	¼ (½)	132 (136)	0.9
SMV-..13H	30 x 30	¼ (½)	132 (136)	0.9
SMV-..15H	40 x 40	¾ (1)	156 (150)	1.7
SMV-..17H	40 x 40	¾ (1)	156 (150)	1.7
SMV-..19H	50 x 50	1 ¼	165	2.9

* With NPT-thread

3. Flow meter and switches with 1 contact model: SMV-3...

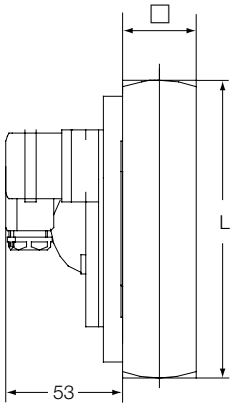

Model	Square [mm]	Thread G	L [mm]	Weight [kg]
SMV-..01H	30 x 30	¼ (½*)	132 (136*)	0.9
SMV-..03H	30 x 30	¼ (½)	132 (136)	0.9
SMV-..05H	30 x 30	¼ (½)	132 (136)	0.9
SMV-..07H	30 x 30	¼ (½)	132 (136)	0.9
SMV-..09H	30 x 30	¼ (½)	132 (136)	0.9
SMV-..11H	30 x 30	¼ (½)	132 (136)	0.9
SMV-..13H	30 x 30	¼ (½)	132 (136)	0.9
SMV-..15H	40 x 40	¾ (1)	156 (150)	1.7
SMV-..17H	40 x 40	¾ (1)	156 (150)	1.7
SMV-..19H	50 x 50	1 ¼	165	2.9

* With NPT-thread

No responsibility taken for errors;
subject to change without prior notice.

Order Details and Dimensions (continued)

1. Flow meter model: SMV-..F0..

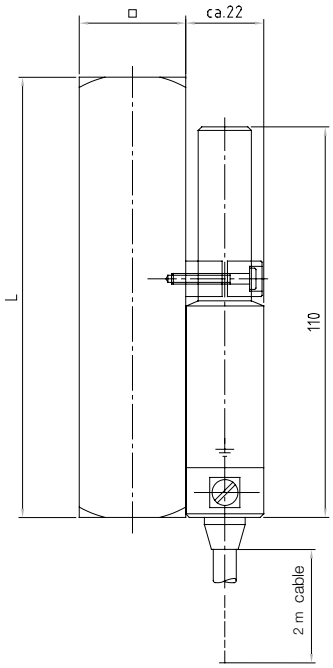

Model	Square [mm]	Thread G	L [mm]	Weight [kg]
SMV-..01H	30 x 30	¼ (½*)	132 (136*)	0.9
SMV-..03H	30 x 30	¼ (½)	132 (136)	0.9
SMV-..05H	30 x 30	¼ (½)	132 (136)	0.9
SMV-..07H	30 x 30	¼ (½)	132 (136)	0.9
SMV-..09H	30 x 30	¼ (½)	132 (136)	0.9
SMV-..11H	30 x 30	¼ (½)	132 (136)	0.9
SMV-..13H	30 x 30	¼ (½)	132 (136)	0.9
SMV-..15H	40 x 40	¾ (1)	156 (150)	1.7
SMV-..17H	40 x 40	¾ (1)	156 (150)	1.7
SMV-..19H	50 x 50	1 ¼	165	2.9

* With NPT-thread

No responsibility taken for errors;
subject to change without prior notice.

2/07 - 2025

Zertifiziertes QM-System
DIN EN ISO 9001
Zertifikat-Nr. 01017

All-Metal Flow Meters and Switches

for liquids

measuring • monitoring • analysing

SMV-..21H / SMV-..22H

- Measuring range:
  10 - 180 or 10 - 250 l/min
  water
- Accuracy:
  ± 5 % of full scale
- p_{max}: 350 bar; t_{max}: 100 °C
- Connection:
  G 1 ¼ or 1 ¼" NPT
- Material:
  brass or stainless steel

S2

KOBOLD companies worldwide:

AUSTRALIA, AUSTRIA, BELGIUM, BULGARIA, CANADA, CHINA, CZECHIA, FRANCE, GERMANY, GREAT BRITAIN, HUNGARY, INDIA, INDONESIA, ITALY, MALAYSIA, MEXICO, NETHERLANDS, PERU, POLAND, REPUBLIC OF KOREA, RUSSIA, SPAIN, SWITZERLAND, THAILAND, TUNISIA, TURKEY, USA, VIETNAM

KOBOLD Messring GmbH
Nordring 22-24
D-65719 Hofheim/Ts.
Head Office:
+49(0)6192 299-0
+49(0)6192 23398
info.de@kobold.com
www.kobold.com

Description

KOBOLD flow meters and -switches series SMV-...21H and SMV-...22H are equipped with a spring loaded float which is guided within a cylindical measuring pipe and in opposit to the principals known up to now it is hollow. The medium flows through a circular clearance which is built by the bore of the float and the mandrel bar (conical shaft) inside.

The float comprises permanent magnets actuating a bistable reed contact external to the flow circuit, that is, the flowing medium is hermetically separated from the electrical contact. In addition it is embedded in a height-adjustable switch housing thus ensuring that the contact cannot be damaged even by an aggressive atmosphere.

As the medium enters the instrument the float rises. Once its magnetic field reaches the contact tips of the reed switch the contact closes. As the flow increases the float rises further until it reaches its stop. This prevents the float from going beyond the contact range of the magnetic operating tube, that is, the contact remains closed thus ensuring bistable switching.

With the models SMV-2... and SMV-3... the magnetic field also activates an external, that is, hermetically separated indicator, as a result of which flows are measured accurately even at high operating pressures. The magnetic field and the indicator are designed so as to ensure that the pointer follows even abrupt changes in flow rate.

Applications

- Lubrication circuits
- Paper-making machines
- Machine tools
- Glass-melting tanks
- Cooling circuits
- Welding machines
- Induction furnaces
- Pumps

Technical Details

Housing:	SMV-x1..:	brass, Ms 58
	SMV-x2..:	stainless steel, 1.4301
Pin and o-ring:	SMV-x1..:	brass, Ms 58
	SMV-x2..:	stainless steel, 1.4301
Float:	oxide, ceramic (magnets) and	
	SMV-x1..:	brass, Ms 58
	SMV-x2..:	stainless steel, 1.4301
Spring:	stainless steel, 1.4310	
Max. temperature:	100 °C	
Max. pressure:	SMV-x1..:	250 bar
	SMV-x2..:	350 bar
Installation position:	independent	
Accuracy:	± 5% of full scale	
Repeatability:	≤1%	

Contacts with SMV-1..., SMV-3... without ATEX

Electrical connection: valve connector DIN EN 175301-803

Electrical switching values:

N/O contact
max. 250 $V_{AC/DC}$ / 1.5 A / 100 W / 100 VA

changeover contact
max. 250 $V_{AC/DC}$ / 1 A / 30 W / 60 VA

N/O contact and
changeover contact (cCSAus)
max. 230 V_{DC} / 0.26 A / 60 W,
60 V_{DC} / 1 A / 60 W,
max. 240 V_{AC} / 0.42 A / 100 W,
100 V_{AC} / 1 A / 100 W

Contacts with SMV-1..., SMV-3... use in hazardous areas

Mechanics: The apparatus can be used as follows in explosive atmospheres in accordance with the applicable erection regulations on machines, devices and plants, such as e.g. EN 1127-1, EN 60079-14 etc.:

a) In Zone 1 (gas hazard, category 2G) in the explosion groups IIA, IIB and IIC

b) In Zone 2 (gas hazard, category 3G) in the explosion groups IIA, IIB and IIC

c) In Zone 21 (dust hazard, category 2D) in the explosion groups IIIA and IIIB

d) In Zone 22 (dust hazard, category 3D) in the explosion groups IIIA and IIIB

ATEX N/O contact
type 41R57
...G0 and GG:

Ex II 3 G Ex ic IIC T4 Gc
Ex II 3 D Ex ic IIIC T125 °C Dc
-20 °C ≤ Ta ≤ 80 °C
max. 250 $V_{AC/DC}$/1,5 A/100 W/100 VA

ATEX changeover contact
type 41R57U
...H0 and HH:

Ex II 3 G Ex ic IIC T4 Gc
Ex II 3 D Ex ic IIIC T125 °C Dc
-20 °C ≤ Ta ≤ 80 °C
max. 250 $V_{AC/DC}$/1 A/30 W/60 VA

Hysteresis: approx. 3.5 mm float movement
6 - 10 mm with ATEX contact

Protection: IP 65 (electr. contact)
IP 54 (side indicator)

No responsibility taken for errors;
subject to change without prior notice.

2/10 - 2022

Order Details

Flow switches with 1 contact model: SMV-1... (Example: **SMV-1121H R0 R32**)

Measuring range l/min water	Pressure loss Δ P (bar)	Float according to version Brass	Float according to version St. steel	Brass	Stainless steel	Contact	Connection female thread	
10 ... 180	0.9	brass, nickel-pl.	st. steel	**SMV-1121H...**	**SMV-1221H...**	**..R0..** = 1 N/O contact **..U0..** = 1 changeover contact **..C0..** = 1 N/O contact (cCSAus) **..D0..** = 1 changeover contact (cCSAus) **..G0..** = 1 ATEX N/O contact (model 41R57) **..H0..** = 1 ATEX changeover contact (model 41R57U) **..RR..** = 2 N/O contact **..UU..** = 2 changeover contact **..CC..** = 2 N/O contact (cCSAus) **..DD..** = 2 changeover contact (cCSAus) **..GG..** = 2 ATEX N/O contact (model 41R57) **..HH..** = 2 ATEX changeover contact (model 41R57U)	**..R32** = G 1 ¼	**..N32** = 1 ¼ NPT
10 ... 250	2.0	brass, nickel-pl.	st. steel	**SMV-1122H...**	**SMV-1222H...**		**..R32** = G 1 ¼	**..N32** = 1 ¼ NPT

Flow meter model: SMV-2... (Example: **SMV-2121H 00 R32**)

Measuring range l/min water	Pressure loss Δ P (bar)	Float according to version Brass	Float according to version St. steel	Brass	Stainless steel	Contact	Connection female thread	
10 ... 180	0.9	brass, nickel-pl.	st. steel	**SMV-2121H...**	**SMV-2221H...**	**..00..** = without contact	**..R32** = G 1 ¼	**..N32** = 1 ¼ NPT
10 ... 250	2.0	brass, nickel-pl.	st. steel	**SMV-2122H...**	**SMV-2222H...**		**..R32** = G 1 ¼	**..N32** = 1 ¼ NPT

Flow meter and switches with 1 contact model: SMV-3... (Example: **SMV-3121H R0 R32**)

Measuring range l/min water	Pressure loss Δ P (bar)	Float according to version Brass	Float according to version St. steel	Brass	Stainless steel	Contact	Connection female thread	
10 ... 180	0.9	brass, nickel-pl.	st. steel	**SMV-3121H...**	**SMV-3221H...**	**..R0..** = 1 N/O contact **..U0..** = 1 changeover contact **..C0..** = 1 N/O contact (cCSAus) **..D0..** = 1 changeover contact (cCSAus) **..G0..** = 1 ATEX N/O contact (model 41R57) **..H0..** = 1 ATEX changeover contact (model 41R57U) **..RR..** = 2 N/O contact **..UU..** = 2 changeover contact **..CC..** = 2 N/O contact (cCSAus) **..DD..** = 2 changeover contact (cCSAus) **..GG..** = 2 ATEX N/O contact (model 41R57) **..HH..** = 2 ATEX changeover contact (model 41R57U)	**..R32** = G 1 ¼	**..N32** = 1 ¼ NPT
10 ... 250	2.0	brass, nickel-pl.	st. steel	**SMV-3122H...**	**SMV-3222H...**		**..R32** = G 1 ¼	**..N32** = 1 ¼ NPT

No responsibility taken for errors;
subject to change without prior notice.

Order Details and Dimensions

1. Flow switches with 1 contact model: SMV-1...

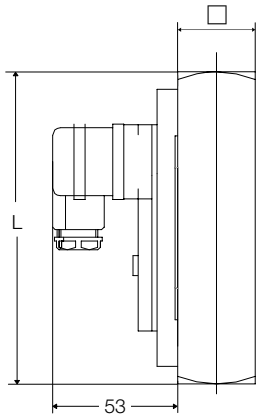

Model	Square [mm]	Thread G / NPT	L [mm]	Weight [kg]
SMV-1.21H	50 x 50	1 ¼	165 (175*)	2.6
SMV-1.22H	50 x 50	1 ¼	165 (175*)	2.6

* With NPT-thread

2. Flow meter model: SMV-2...

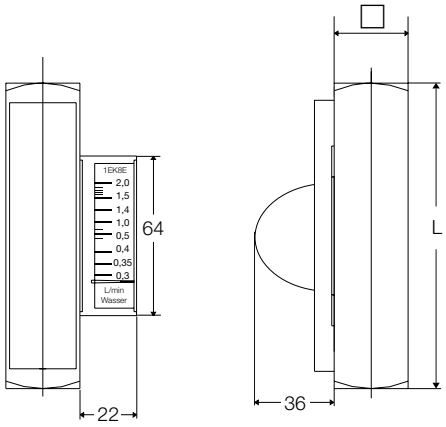

Model	Square [mm]	Thread G / NPT	L [mm]	Weight [kg]
SMV-2.21H	50 x 50	1 ¼	165 (175*)	2.6
SMV-2.22H	50 x 50	1 ¼	165 (175*)	2.6

* With NPT-thread

3. Flow meter and switches with 1 contact model: SMV-3...

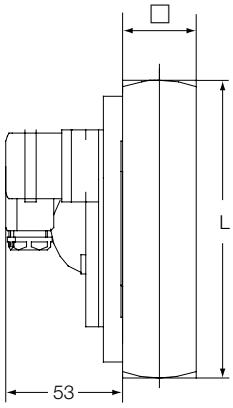

Model	Square [mm]	Thread G / NPT	L [mm]	Weight [kg]
SMV-3.21H	50 x 50	1 ¼	165 (175*)	2.6
SMV-3.22H	50 x 50	1 ¼	165 (175*)	2.6

* With NPT-thread

No responsibility taken for errors;
subject to change without prior notice.

2/10 - 2022