M-Zert
Zertifiziertes QM-System
DIN EN ISO 9001
Zertifikat-Nr. 01017

Viscosity-Compensated Flow Meters and Switches

for viscous liquids

KOBOLD

measuring • monitoring • analysing

VKM

- Measuring range:
  oil 0.01 - 0.07 ... 8 - 80 l/min
- Basic accuracy:
  ± 4 % of full scale
- p_{max} 350 bar, t_{max} 100 °C
- Viscosity range:
  1 ... 540 mm²/s
- Connection: G ¼ ... G 1 female
  ¼" ... 1" NPT female
- Material: brass, stainless steel

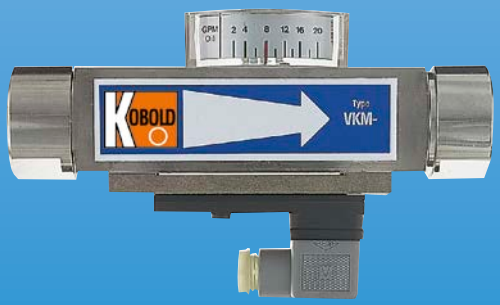

S2

KOBOLD companies worldwide:

AUSTRALIA, AUSTRIA, BELGIUM, BULGARIA, CANADA, CHINA, CZECHIA, FRANCE, GERMANY, GREAT BRITAIN, HUNGARY, INDIA, INDONESIA, ITALY, MALAYSIA, MEXICO, NETHERLANDS, PERU, POLAND, REPUBLIC OF KOREA, SPAIN, SWITZERLAND, THAILAND, TUNISIA, TURKEY, USA, VIETNAM

KOBOLD Messring GmbH
Nordring 22-24
D-65719 Hofheim/Ts.
Head Office:
+49(0)6192 299-0
+49(0)6192 23398
info.de@kobold.com
www.kobold.com

Description

The flow meters and switches model VKM have a spring-loaded float, which slides within a cylindrical measuring tube and has an integral orifice which is believed to be unique.

This and other design features means that it has for the first time become possible to create a flow meter and switch which fully compensates for viscosity and to a large extent for density even with very low flows. The float of these devices contains a permanent magnet which actuates a potential free bistable reed contact mounted outside the flow thus ensuring her-metic separation between the medium and the electrical contact system. The contact is embedded within a height-adjustable plastic housing to prevent damage to the contacts by mechanical action or aggressive atmospheres.

As the medium enters the instrument the float rises. Once its magnetic field reaches the contact tips of the reed switch the contact closes. As the flow increases the float rises further until it reaches its stop. This prevents the float from going beyond the contact range of the magnetic operating tube, that is, the contact remains closed thus ensuring bistable switching.

Viscosity Compensation

If the viscosity changes from 1 mm^2/s to 540 mm^2/s the indicated value is still accurate within ±5%, even with very low flows, for example, 0.1 l/min.

Comparable devices, for instance conventional float-type flow meters, are, if the viscosity changes to such an extent, subject to indicating errors up to 2 500%, especially with comparable low flows. Other instruments with spring-loaded floats, which are allegedly viscosity compensated, still produce indicating errors of more than 500% with the same change in viscosity and a flow of 0.1 l/min.

Thanks to the virtually perfect viscosity compensation and good density compensation the flow meters and switches of the latest generation are suitable both for water and highly viscous oil, without having to change the scale and without readjustment. This constitutes an extremely important advance especially in the critical area of oil lubrication circuits where measurement and switching are necessary at changing media temperatures.

Applications

- Lubrication circuits
- Paper-making machines
- Machine tools
- Oil lubrication circuits
- Hydraulics
- Extruding plant
- Printing presses

Technical Details

Body:	VKM- x1..: brass, nickel-plated VKM- x2..: stainless steel 1.4301
Screwed fitting:	VKM- x1..: brass, nickel-plated VKM- x2..: stainless steel 1.4301
Float:	VKM- x1..: brass, nickel-plated VKM- x2..: stainless steel 1.4301
Orifice:	stainless steel 1.4310
Spring:	stainless steel 1.4310
Magnet:	oxide ceramics
Seals:	VKM-x1..: NBR VKM-x2..: FPM
Max. temperature:	+100 °C
Max. pressure:	VKM- x1..: 250 bar VKM- x2..: 350 bar
Installation position:	any
Basic accuracy:	± 4 % of full scale (with a viscosity of 105 mm^2/s)
Measuring error due to change in viscosity:	for changes in viscosity within 1...540 mm^2/s the additional deviation is ± 5 % of full scale max.
Viscosity range:	1... 540 mm^2/s VKM-xx01 (70 ... 400 mm^2/s)

Contacts

Optional with VKM-1..., VKM-3... without ATEX

Electrical connection:	valve connector DIN EN 175301-803
Electrical switching values:	N/O contact max. 250 $V_{AC/DC}$ / 1.5 A / 100 W / 100 VA changeover contact max. 250 $V_{AC/DC}$ / 1 A / 30 W / 60 VA N/O contact and changeover contact (cCSAus) max. 230 V_{DC} / 0.26 A / 60 W, 60 V_{DC} / 1 A / 60 W, max. 240 V_{AC} / 0.42 A / 100 W, 100 V_{AC} / 1 A / 100 W

Contacts with VKM-1..., VKM-3... use in hazardous areas

Electrical connection:	2 m PVC cable (option F0), all other models plug acc. DIN EN 175301-803
Mechanics:	The apparatus can be used as follows in explosive atmospheres in accordance with the applicable erection regulations on machines, devices and plants, such as e.g. EN 1127-1, EN 60079-14 etc.: a) In Zone 1 (gas hazard, category 2G) in the explosion groups IIA, IIB and IIC

No responsibility taken for errors;
subject to change without prior notice.

1/07 - 2025

b) In Zone 2 (gas hazard, category 3G) in the explosion groups IIA, IIB and IIC

c) In Zone 21 (dust hazard, category 2D) in the explosion groups IIIA and IIIB

d) In Zone 22 (dust hazard, category 3D) in the explosion groups IIIA and IIIB

ATEX contact ...F0: Ex II 2 G Ex mb IIC T6 Gb
Ex II 2 D Ex mb IIIC T80 °C Db
max. 250 V_{AC}/1,5 A/100 VA
IECEx BVS 07.0007X

ATEX N/O contact type 41R57 ...G0 and GG: Ex II 3 G Ex ic IIC T4 Gc
Ex II 3 D Ex ic IIIC T125 °C Dc
-20 °C ≤ Ta ≤ 80 °C
max. 250 $V_{AC/DC}$/1,5 A/100 W/100 VA

ATEX changeover contact type 41R57U ...H0 and HH: Ex II 3 G Ex ic IIC T4 Gc
Ex II 3 D Ex ic IIIC T125 °C Dc
-20 °C ≤ Ta ≤ 80 °C
max. 250 $V_{AC/DC}$/1 A/30 W/60 VA

Hysteresis: approx. 3.5 mm float movement
6 - 10 mm with ATEX contact

Protection: IP 65 (electrical contact)
IP 54 (side indicator)

Order Details

Viscosity-compensated flow switches model: VKM-1...

Measuring range l/min oil	Pressure loss Δ P [bar] at rated flow* min.	max.	Brass	Stainless steel	Contact	Connection		Option special connection	Flow direction
0.01...0.07**	0.02	1.0	**VKM-1101...**	**VKM-1201...**	**..R0..** = 1 N/O contact **..U0..** = 1 changeover contact **..F0..** = 1 Ex N/O contact 2 m cable (5 m/10 m on request) **..C0..** = 1 N/O contact (cCSAus) **..D0..** = 1 changeover contact (cCSAus) **..G0..** = 1 ATEX N/O contact (model 41R57) **..H0..** = 1 ATEX changeover contact (model 41R57U) **..RR..** = 2 N/O contacts **..UU..** = 2 changeover contacts **..CC..** = 2 N/O contacts (cCSAus) **..DD..**= 2 changeover contacts (cCSAus) **..GG..** = 2 ATEX N/O contact (model 41R57) **..HH..** = 2 ATEX changeover contact (model 41R57U)	**..R08** = G ¼	**..N08** = ¼ NPT	**0** = without option **B** = outlet female thread inlet BVB manifold	**B** = from bottom **T** = from top **L** = from left **R** = from right
0.1...0.45	0.03	0.8	**VKM-1102...**	**VKM-1202...**					
0.2...1.2	0.05	1.1	**VKM-1103...**	**VKM-1203...**		**..R08** = G ¼ **..R15** = G ½	**..N08** = ¼ NPT **..N15** = ½ NPT		
0.5...2	0.07	1.2	**VKM-1104...**	**VKM-1204...**					
0.3...5	0.05	0.9	**VKM-1105...**	**VKM-1205...**					
1.5...10	0.05	0.8	**VKM-1106...**	**VKM-1206...**					
4...14	0.08	1.1	**VKM-1107...**	**VKM-1207...**		**..R15** = G ½ **..R20** = G ¾	**..N15** = ½ NPT **..N20** = ¾ NPT		
5...20	0.05	1.1	**VKM-1108...**	**VKM-1208...**					
4...40	0.1	0.4	**VKM-1109...**	**VKM-1209...**		**..R20** = G ¾ **..R25** = G 1	**..N20** = ¾ NPT **..N25** = 1 NPT		
5...55	0.15	1.1	**VKM-1110...**	**VKM-1210...**					
7...70	0.15	1.1	**VKM-1111...**	**VKM-1211...**					
8...80	0.15	1.1	**VKM-1112...**	**VKM-1212...**		**..R25** = G 1	**..N25** = 1 NPT		

* Pressure loss refers to water
** Viscosity range 70 ... 400 mm^2/s

No responsibility taken for errors;
subject to change without prior notice.

Order Details (continued)

Viscosity-compensated flow meter model: VKM-2...

Measuring range l/min oil	Pressure loss Δ P [bar] at rated flow* min.	max.	Brass	Stainless steel	Contact	Connection		Option special connection	Flow direction
0.01...0.07**	0.02	1.0	**VKM-2101...**	**VKM-2201...**	**..00..** = without contact	**..R08** = G ¼	**..N08** = ¼ NPT	**0** = without option **B** = outlet female thread inlet BVB manifold	**B** = from bottom **T** = from top **L** = from left **R** = from right
0.1...0.45	0.03	0.8	**VKM-2102...**	**VKM-2202...**					
0.2...1.2	0.05	1.1	**VKM-2103...**	**VKM-2203...**		**..R08** = G ¼ **..R15** = G ½	**..N08** = ¼ NPT **..N15** = ½ NPT		
0.5...2	0.07	1.2	**VKM-2104...**	**VKM-2204...**					
0.3...5	0.05	0.9	**VKM-2105...**	**VKM-2205...**					
1.5...10	0.05	0.8	**VKM-2106...**	**VKM-2206...**					
4...14	0.08	1.1	**VKM-2107...**	**VKM-2207...**		**..R15** = G ½	**..N15** = ½ NPT		
5...20	0.05	1.1	**VKM-2108...**	**VKM-2208...**		**..R20** = G ¾	**..N20** = ¾ NPT		
4...40	0.1	0.4	**VKM-2109...**	**VKM-2209...**		**..R20** = G ¾ **..R25** = G 1	**..N20** = ¾ NPT **..N25** = 1 NPT		
5...55	0.15	1.1	**VKM-2110...**	**VKM-2210...**					
7...70	0.15	1.1	**VKM-2111...**	**VKM-2211...**					
8...80	0.15	1.1	**VKM-2112...**	**VKM-2212...**		**..R25** = G 1	**..N25** = 1 NPT		

* Pressure loss refers to water
** Viscosity range 70 ... 400 mm²/s

Viscosity-compensated flow meters and switches model: VKM-3...

Measuring range l/min oil	Pressure loss Δ P [bar] at rated flow* min.	max.	Brass	Stainless steel	Contact	Connection		Option special connection	Flow direction
0.01...0.07**	0.02	1.0	**VKM-3101...**	**VKM-3201...**	**..R0..** = 1 N/O contact **..U0..** = 1 changeover contact **..F0..** = 1 Ex N/O contact 2 m cable (5 m / 10 m on request) **..C0..** = 1 N/O contact (cCSAus) **..D0..** = 1 changeover contact (cCSAus) **..G0..** = 1 ATEX N/O contact (model 41R57) **..H0..** = 1 ATEX changeover contact (model 41R57U) **..RR..** = 2 N/O contacts **..UU..** = 2 changeover contacts **..CC..** = 2 N/O contacts (cCSAus) **..DD..** = 2 changeover contacts (cCSAus) **..GG..** = 2 ATEX N/O contact (model 41R57) **..HH..** = 2 ATEX changeover contact(model41R57U)	**..R08** = G ¼	**..N08** = ¼ NPT	**0** = without option **B** = outlet female thread inlet BVB manifold	**B** = from bottom **T** = from top **L** = from left **R** = from right
0.1...0.45	0.03	0.8	**VKM-3102...**	**VKM-3202...**					
0.2...1.2	0.05	1.1	**VKM-3103...**	**VKM-3203...**		**..R08** = G ¼ **..R15** = G ½	**..N08** = ¼ NPT **..N15** = ½ NPT		
0.5...2	0.07	1.2	**VKM-3104...**	**VKM-3204...**					
0.3...5	0.05	0.9	**VKM-3105...**	**VKM-3205...**					
1.5...10	0.05	0.8	**VKM-3106...**	**VKM-3206...**					
4...14	0.08	1.1	**VKM-3107...**	**VKM-3207...**		**..R15** = G ½	**..N15** = ½ NPT		
5...20	0.05	1.1	**VKM-3108...**	**VKM-3208...**		**..R20** = G ¾	**..N20** = ¾ NPT		
4...40	0.1	0.4	**VKM-3109...**	**VKM-3209...**		**..R20** = G ¾ **..R25** = G 1	**..N20** = ¾ NPT **..N25** = 1 NPT		
5...55	0.15	1.1	**VKM-3110...**	**VKM-3210...**					
7...70	0.15	1.1	**VKM-3111...**	**VKM-3211...**					
8...80	0.15	1.1	**VKM-3112...**	**VKM-3212...**		**..R25** = G 1	**..N25** = 1 NPT		

* Pressure loss refers to water
** Viscosity range 70 ... 400 mm²/s

No responsibility taken for errors;
subject to change without prior notice.

1/07 - 2025

Order Details (continued)

Viscosity-compensated flow meter with evaluating electronics model: VKM-7...

Measuring range l/min oil approx.	Pressure loss Δ P [bar] at rated flow* min.	max.	Brass	Stainless steel	Output	Connection		Flow direction
0.01...0.063**	0.02	1.0	**VKM-7101...**	**VKM-7201...**	**..K04..** = combination indication 100 - 240 $V_{AC/DC}$, ±10% (50-60 Hz) **..K34..** = combination indication 10 - 40 V_{DC}, 18-30 V_{AC} 50/60 Hz	**..R08** = G ¼	**..N08** = ¼ NPT	**B** = from bottom **T** = from top **L** = from left **R** = from right
0.1...0.4	0.03	0.8	**VKM-7102...**	**VKM-7202...**				
0.2...1.1	0.05	1.1	**VKM-7103...**	**VKM-7203...**		**..R08** = G ¼ **..R15** = G ½	**..N08** = ¼ NPT **..N15** = ½ NPT	
0.5...1.8	0.07	1.2	**VKM-7104...**	**VKM-7204...**				
0.5...4	0.05	0.9	**VKM-7105...**	**VKM-7205...**				
3...8.1	0.05	0.8	**VKM-7106...**	**VKM-7206...**				
4...12.6	0.08	1.1	**VKM-7107...**	**VKM-7207...**		**..R15** = G ½ **..R20** = G ¾	**..N15** = ½ NPT **..N20** = ¾ NPT	
5...18	0.05	1.1	**VKM-7108...**	**VKM-7208...**				
4...36	0.1	0.4	**VKM-7109...**	**VKM-7209...**		**..R20** = G ¾ **..R25** = G 1	**..N20** = ¾ NPT **..N25** = 1 NPT	
5...50	0.15	1.1	**VKM-7110...**	**VKM-7210...**				
7...63	0.15	1.1	**VKM-7111...**	**VKM-7211...**				
8...72	0.15	1.1	**VKM-7112...**	**VKM-7212...**		**..R25** = G 1	**..N25** = 1 NPT	

* Pressure loss refers to water
** Viscosity range 70 ... 400 mm^2/s

Viscosity-compensated flow meter with compact electronics model: VKM-8...

Measuring range l/min oil approx.	Pressure loss Δ P [bar] at rated flow* min.	max.	Brass	Stainless steel	Output	Connection		Flow direction
0.01...0.063**	0.02	1.0	**VKM-8101...**	**VKM-8201...**	**..C0R..** = compact electronic 24 V_{DC}, 2 x PNP **..C0M..** = compact electronic 24 V_{DC}, 2 x NPN **..C4P..** = compact electronic 24 V_{DC}, 4-20 mA, 1 x PNP **..C4N..** = compact electronic 24 V_{DC}, 4-20 mA, 1 x NPN	**..R08** = G ¼	**..N08** = ¼ NPT	**B** = from bottom **T** = from top **L** = from left **R** = from right
0.1...0.4	0.03	0.8	**VKM-8102...**	**VKM-8202...**				
0.2...1.1	0.05	1.1	**VKM-8103...**	**VKM-8203...**		**..R08** = G ¼ **..R15** = G ½	**..N08** = ¼ NPT **..N15** = ½ NPT	
0.5...1.8	0.07	1.2	**VKM-8104...**	**VKM-8204...**				
0.5...4	0.05	0.9	**VKM-8105...**	**VKM-8205...**				
3...8.1	0.05	0.8	**VKM-8106...**	**VKM-8206...**				
4...12.6	0.08	1.1	**VKM-8107...**	**VKM-8207...**		**..R15** = G ½ **..R20** = G ¾	**..N15** = ½ NPT **..N20** = ¾ NPT	
5...18	0.05	1.1	**VKM-8108...**	**VKM-8208...**				
4...36	0.1	0.4	**VKM-8109...**	**VKM-8209...**		**..R20** = G ¾ **..R25** = G 1	**..N20** = ¾ NPT **..N25** = 1 NPT	
5...50	0.15	1.1	**VKM-8110...**	**VKM-8210...**				
7...63	0.15	1.1	**VKM-8111...**	**VKM-8211...**				
8...72	0.15	1.1	**VKM-8112...**	**VKM-8212...**		**..R25** = G 1	**..N25** = 1 NPT	

* Pressure loss refers to water
** Viscosity range 70 ... 400 mm^2/s

No responsibility taken for errors;
subject to change without prior notice.

Model VKM-8...

Indication:	3-digit LED
Switching output:	semiconductor PNP or NPN
Analogue output:	4-20 mA, 3-wire max. 500 Ω, linear
Power supply:	24 V_{DC} ± 20 %
Max. temperature:	+80 °C
Electr. connection:	connector M12x1

Model VKM-7...

With this version our proven evaluating electronics ADI (see also data sheet ADI-1) in a field housing are fitted to the flow meter.

- Digital indication, 5-digit, Bargraph indication, 2 changeover contacts, Analogue output 0(4) - 20 mA and 0 - 10 V

Important!

The max. upper range values are approximately 10 % lower than for other types.

VKM versions

Five different versions are available

VKM-1...
Flow switches with 1 contact

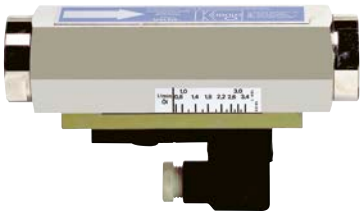

VKM-2...
Flow Meters

VKM-3...
Flow Meters and switches with 1 contact

VKM-7...
Flow Meters with evaluating electronics

VKM-8...
Flow Meters with compact electronics

No responsibility taken for errors;
subject to change without prior notice.

1/07 - 2025

Dimensions

Model	Square [mm]	Length L Connection [mm]	AF Connection [mm]	Weight* [kg]
VKM-..01	40 x 40	162	36	1.7
VKM-..02	40 x 40	162	36	1.7
VKM-..03	40 x 40	162	36	1.7
VKM-..04	40 x 40	162	36	1.7
VKM-..05	40 x 40	162	36	1.7
VKM-..06	40 x 40	162	36	1.7
VKM-..07	40 x 40	162	36	1.7
VKM-..08	40 x 40	162	36	1.7
VKM-..09	40 x 40	162 (186.5)**	36 (41)**	1.7
VKM-..10	40 x 40	162 (186.5)**	36 (41)**	1.7
VKM-..11	40 x 40	162 (186.5)**	36 (41)**	1.7
VKM-..12	40 x 40	186.5	41	1.7

* Weight valid for: VKM-1.., VKM-2...
for model VKM-3... + 0.1 kg
for model VKM-7... + 1.4 kg

** with G 1 or 1" NPT

VKM-1.., VKM-2.., VKM-3..

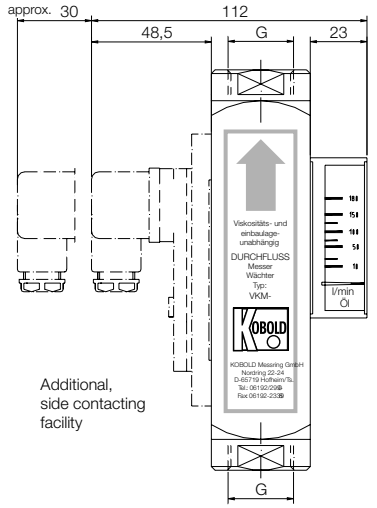

VKM-7...

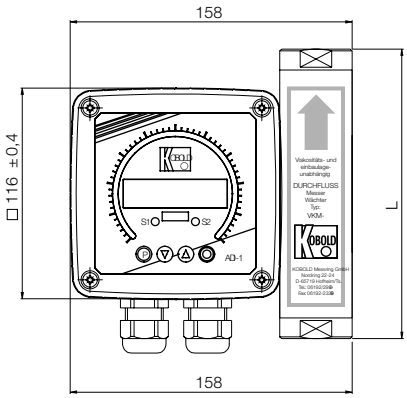

Depth: 127 mm

VKM-8...

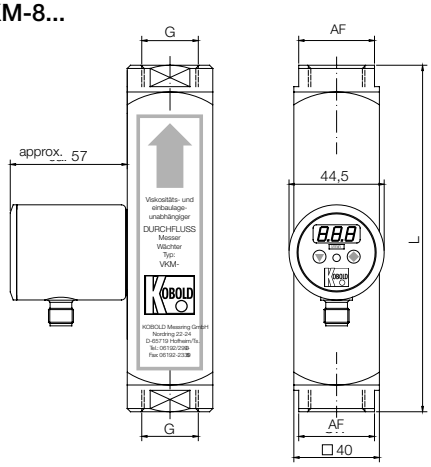

VKM-..F0..

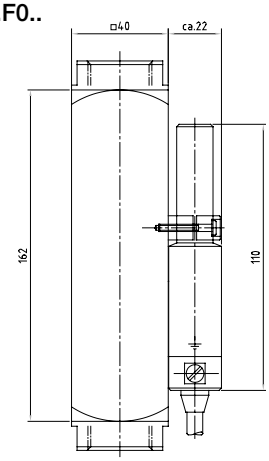

No responsibility taken for errors;
subject to change without prior notice.