Sensors for Humidity and Temperature

measuring • monitoring • analysing

AFK-A / AFK-F

- Measurement of relative humidity and temperature
- Also available in high pressure (up to 25 bar) and high-temperature version (up to 200 °C)
- Operating range: 0 ... 100 % rh, -60 ... +200 °C
- Short response times
- Analogue outputs for relative humidity, temperature & several derived parameters
- For indoors and air ducts
- Capacitive method of measurement

A2

KOBOLD Messring GmbH
Nordring 22-24
D-65719 Hofheim/Ts.
Head Office:
+49(0)6192 299-0
+49(0)6192 23398
info.de@kobold.com
www.kobold.com

KOBOLD sensors in the AFK-A series combine the digital measured value processing with the advantages of our robust industrial sensors which can be used at temperatures up to -80 ... 200 °C resp. at pressures up to 25 bar. They are ideally suited for demanding industrial applications.

The AFK-A series with exchangeable sensor part consists of a calibrated sensor part with 4-pin plug and a transmitter with analog output. Sensor part and transmitter can be combined and matched with each other, according to the physical and mechanical requirements. The measured humidity and temperature values are calculated in the calibrated sensor part with the calibration values stored there, and are passed on as digital measurement values.

In the two-piece design AFK-F series, sensor part and transmitter are firmly connected. The sensors can be readjusted on site using buttons and LED. They can also be factory-calibrated and readjusted using software.

Description

The sensors of the AFK-A and AFK-F series measure humidity by means of a humidity-dependant condenser. The capacitive humidity measuring element, produced using thinfilm technology, consists of a base plate, on which the electrodes are housed and a hygroscopic polymer layer above it. The hygroscopic polymer layer absorbs water molecules from the medium to be measured (air) or releases them, thereby altering the capacity of the condenser.

The transmitters processor uses the values of the relative humidity and the temperature to calculate the dew point temperature, the enthalpy, the mixing ratio, the absolute humidity or the wet-bulb temperature, in accordance with the laws of physics[1]. The values are emitted at two analogue outputs with the standardised signals 0 ... 1 V_{DC} or 0 ... 10 V_{DC} or 4 ... 20 mA. Further measuring ranges on request.

The sensor parts and transmitters of the AFK-F series are firmly connected. In addition, the installation of a passive temperature element is possible (e.g. Pt100). All further technical features correspond to the ones of the AFK-A series.

The scope of delivery includes the sintered high-grade steel filter AFZ-GE13. If a better dynamics should be required, we recommend to use the filter type AFZ-GE04 together with a PTFE filter which protects the humidity sensing element directly. We recommend to do so in particular at low air speeds and also its increased service life, even under more challenging operating conditions (pollutant impact or permanent humidity > 95 %rh). The use of different filters is not possible. The sensors are designed for unpressurised systems (except the ...HD, 0D, ED... version), the measurement medium is non-aggressive air.

[1] The accuracy of the calculated values depends on both the operating point in accordance with the hx diagram and on the primary values measured. The hx processor operates in the range -30 °C < T < +70 °C, 5 % rh<F<95 % rh. Values outside this range are not calculated, the last valid value is displayed. Normal atmospheric pressure of 1013.25 mbar is used when calculating the hx values.

Technical Details

Humidity

Measuring range:	0 ... 100 %rh
Measuring accuracy *):	
10 ... 90 %rh at 23 °C:	±1,5 %rh
at <10 %rh or >90 %rh:	±2 %rh
Influence of temperature (TK):	±0,02 %rh/K
Hysteresis:	< 1 %rh
Response time t_{63} at v = 2m/s:	< 10 s

*) ex works. Depending on the specific range of application a regular recalibration of the sensor parts has to be effected. Higher accuracies (±0.5 ... ±0.7 %rh including temperature dependence of electronics at customised temperature up to +70 °C even at < 10 %rh including calibration certificate) on request.

Temperature:

Measuring element:	Pt1000 cl. B
Output range:	acc. to "sensor version", see Order Details
Measuring accuracy at 23 °C *):	±0,15 K
Influence of temperature (TK):	<0,005 K/K

*) depending on the extension of the output range, max. 0.25 K

Options:

Digital display:	2 lines, 3 digits + 1 decimal place, display approx. 21 x 40 mm², digit approx. 8 mm high

General Details:

Measuring medium:	air, non-aggressive
Operating voltage:	
0 ... 1 V:	6 ... 30 V_{DC} / 6 ... 26 V_{AC}
0 ... 10 V:	15 ... 30 V_{DC} / 13 ... 26 V_{AC}
4 ... 20 mA:	10 ... 30 V_{DC}
Power consumption:	< 7 mA

load R_L (current output):

$$R_L(\Omega) = \frac{\text{supply voltage - 10 V}}{0{,}02\ \text{A}} \pm 50\,\Omega$$

Load resistance (voltage output) 0 ... 10(1) V: ≥ 10 (2) kOhm

No responsibility taken for errors; subject to change without prior notice.

1/09 - 2026

Technical Details (continued)

Admissible ambient temp:
on the transmitter: -40 ... 85 °C
use of duct sensor up to 150 °C (TH up to 200 °C): -40 ... 50 °C

Protection:
Transmitter: IP 65
Measuring head: (see table)
Plug-in connection sensor part ---> Transmitter: IP 67

Material of housing:
Sensor part: stainless steel
Transmitter: pressure die casting of alu

Directive about electromagnetic compatibility 2014/30/EU:
DIN EN 61326-1 issue 07/13
DIN EN 61326-2-3 issue 07/13

Working range for humidity and temperature

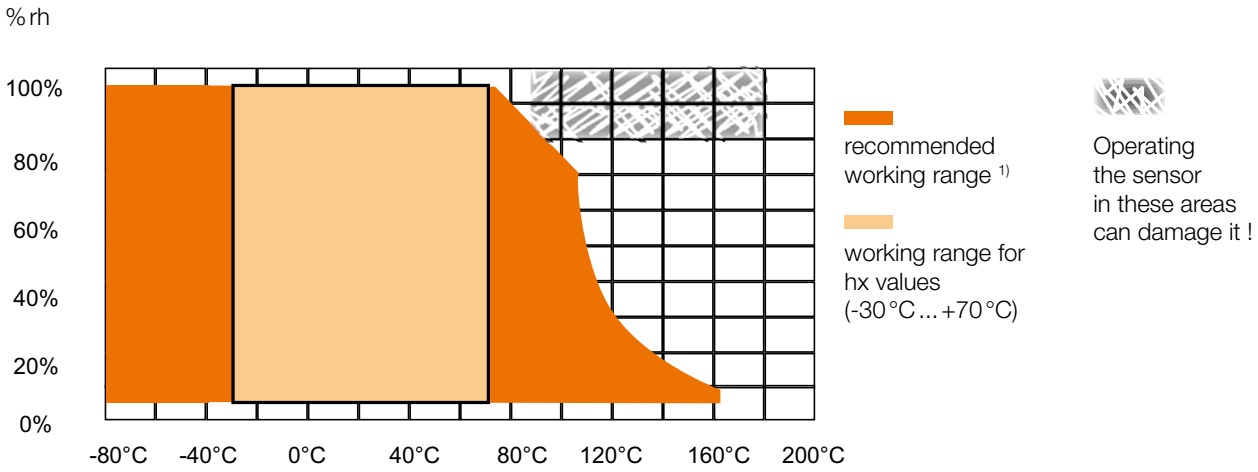

1) In continuous operation mode, the elements should be used up to an absolute humidity level which corresponds to a dewpoint temperature not exceeding 60 °C. The elements can be used at dew-point temperatures of up to 90 °C during short work cycles (e.g. in a control process).

No responsibility taken for errors;
subject to change without prior notice.

Order Details exchangeable sensor parts Model AFK-A (Example: **AFK-AKK1FNK0030**)

Model	Version	Design / Physical output transmitter	Output signal transmitter / Power supply	Output range 1/ Output range 2
AFK-	**A** = exchangeable sensor part	**WK** = wall mounting / two active outputs **WF**[3] = wall mounting / relative humidity or other calculated and humidity dependent variable, active **KK** = duct version / two active outputs **KF**[3] = duct version / relative humidity or other calculated and humidity dependent variable, active	**1** = 0...1 V / 6...30 V_{DC} / 6...26 V_{AC} **2** = 0...10 V / 15...30 V_{DC} / 13...26 V_{AC} **4** = 4...20 mA / 10...30 V_{DC}	**F** = humidity (0...100 % r.h.)/ temperature [1] **D** = humidity (0...100 % r.h.)/ dew point (-20...70 °C) **H** = humidity (0...100 % r.h.)/ enthalpy (0...80 kJ/kg) **X** = humidity (0...100 % r.h.)/ mixing ratio (0...100 g/kg dry air) **A** = humidity (0...100 % r.h.)/ absolute humidity (0...20 g/m³) **W** = humidity (0...100 % r.h.)/ wet-bulb temperature (-10...50 °C) **K**[4]= humidity (0...100 % r.h.)/ output not connected

Display	Sensor design	Sensor version	Filter	Special version
N = no display **D** = with display	**K** = compact **R** = remote, standard cable length 1.5 m **S** = remote, special cable length "x" metre (specify in clear text)[2]	**00** = operating temperature range -40...+85 °C (standard) **0D** = pressure-proof 20 mbar...10 bar at -40...85 °C **11** = ammonia resistant -40...85 °C **0V** = operating temperature range -40...85 °C sealing against vibrations **0E** = operating temperature range -50...150 °C (sensor design K only) **ED** = pressure-proof 20 mbar...10 bar at -50...150 °C **1E** = ammonia resistant -50...150 °C (duct version) **0H** = operating temperature range -80...200 °C (for remote version only) **HD** = operating temperature range -60...160 °C and admissible ambient pressure up to 25 bar (for remote version only) **FW** = module with fixed values of humidity and temperature	**3** = sintered metal filter of stainless steel AFZ-GE13 (standard), IP65 **4** = open filter of stainless steel AFZ-GE04 and PTFE protection, IP00 **6** = stainless steel filter with PTFE membrane AFZ-GE26, IP65 **8** = stainless steel filter with mounted PTFE filter AFZ-GE28 **9** = sintered filter made of fine-pored PTFE Ø 15 mm AFZ-GE29, IP65	**0** = none **Y** = special version (specify in clear text)

[1] operating temperature range setting = as per temperature range of "Sensor version"
[2] in 0.5 m steps, for sensors with temperature range < -40 and > 85 °C the maximum length is 5 m
[3] Order only with output range 1/ output range 2 option "K"
[4] Only combinable with options "WF" and "KF"

No responsibility taken for errors; subject to change without prior notice.
1/09 - 2026

Order Details fixed sensor parts Model AFK-F (Example: **AFK-FKK1FNK0030**)

Model	Version	Design / Physical output transmitter	Output signal transmitter / Power supply	Output range 1/ Output range 2
AFK-	**F** = firmly connected sensor and transmitter	**WK** = wall mounting / two active outputs **WF**[4] = wall mounting / relative humidity or other calculated and humidity dependent variable, active **WC** = wall mounting / one active output, temperature passive **KK** = duct version / two active outputs **KF**[4] = duct version / relative humidity or other calculated and humidity dependent variable, active **KC** = duct version / one active output, temperature passive	**1** = 0 ... 1 V / 6 ... 30 V_{DC} / 6 ... 26 V_{AC} **2** = 0 ... 10 V / 15 ... 30 V_{DC} / 13 ... 26 V_{AC} **4** = 4 ... 20 mA / 10 ... 30 V_{DC}	**F** = humidity (0 ... 100 % r.h.)/ temperature [1] **D** = humidity (0 ... 100 % r.h.)/ dew point (-20 ... 70 °C) **H** = humidity (0 ... 100 % r.h.)/ enthalpy (0 ... 80 kJ/kg) **X** = humidity (0 ... 100 % r.h.)/ mixing ratio (0 ... 100 g/kg dry air) **A** = humidity (0 ... 100 % r.h.)/ absolute humidity (0 ... 20 g/m³) **W** = humidity (0 ... 100 % r.h.)/ wet-bulb temperature (-10 ... 50 °C) **K**[5] = humidity (0 ... 100 % r.h.)/ output not connected

Display	Sensor design	Sensor version	Filter	Special version
N = no display **D** = with display	**K** = compact **R** = remote, standard cable length 1.5 m **S** = remote, special cable length "x" metre (specify in clear text) [2]	**00** = standard, operating temperature range -40 ... +85 °C **11** = ammonia resistant -40 ... 85 °C **0V** = operating temperature range -40 ... 85 °C sealing against vibrations **0E** = operating temperature range -50 ... 150 °C (sensor design K only) **ED**[3] = pressure-proof 20 mbar ... 10 bar at -50 ... 150 °C **1E** = ammonia resistant -50 ... 150 °C (duct version) **0H** = operating temperature range -80 ... 200 °C (for remote version only) **KH**[3] = pressure-proof up to 10 bar and -25 ... 110 °C (ball-valve) **TH**[3] = design thermally decoupled -80 ... 200 °C	**for Design K / for remote version** **3** = sintered metal filter of stainless steel AFZ-GE13 (standard), IP 65 **4** = open filter of stainless steel AFZ-GE04 and PTFE protection, IP 00 **6** = stainless steel filter with PTFE membrane AFZ-GE26, IP 65 **9** = sintered filter made of fine-pored PTFE Ø 15 mm AFZ-GE29, IP 65 (not possible with sensor version "KH") **8** = stainless steel filter with mounted PTFE filter AFZ-GE28 **for Design W** **S** = protective plastic basket, open, conductive metallized finish AFZ-GE16 (standard) **T** = AFZ-GE16 with PTFE protection **V** = AFZ-GE16 with inserted filter gauze made of stainless steel (AFZ-GE17) **M** = membrane filter AFZ-GE20 **E** = fine-pored sintered filter of stainless steel AFZ-GE21	**0** = none **Y** = special version (specify in clear text)

[1] operating temperature range setting = as per temperature range of "Sensor version"
[2] in 0.5 m steps, for sensors with temperature range < -40 and > 85 °C the maximum length is 5 m
[3] only possible for duct version
[4] Order only with output range 1/ output range 2 option "K"
[5] Only combinable with options "WF" and "KF"

No responsibility taken for errors;
subject to change without prior notice.

Order Details Spare Transmitter for AFK-A... series Model AFK-T (Example: **AFK-TKK1FN0**)

Model	Version	Design	Physical output transmitter	Output signal transmitter / Power supply	Output range 1/ output range 2
AFK-	**T** = spare transmitter for exchangeable version AFK-A	**K** = duct version **W** = wall mounting	**K** = two active outputs **F**[2] = relative humidity or other calculated and humidity dependent variable, active	**1** = 0...1 V / 6...30 V_{DC} / 6...26 V_{AC} **2** = 0...10 V / 15...30 V_{DC} / 13...26 V_{AC} **4** = 4...20 mA / 10...30 V_{DC}	**F** = humidity (0...100 % r.h.)/ temperature [1] **D** = humidity (0...100 % r.h.)/ dew point (-20...70 °C) **H** = humidity (0...100 % r.h.)/ enthalpy (0...80 kJ/kg) **X** = humidity (0...100 % r.h.)/ mixing ratio (0...100 g/kg dry air) **A** = humidity (0...100 % r.h.)/ absolute humidity (0...20 g/m³) **W** = humidity (0...100 % r.h.)/ wet-bulb temperature (-10...50 °C) **K**[3] = humidity (0...100 % r.h.)/ output not connected

Display	Special version
N = no display **D** = with display	**0** = none **Y** = special version (specify in clear text)

[1] as per temperature range of "Sensor version" (to be specified in clear text)
[2] Order only with output range 1/ output range 2 option "K"
[3] Only combinable with "physical output transmitter" option "F"

Order Details Spare Sensor for AFK-A... series Model AFK-S (Example: **AFK-SK0030**)

Model	Version	Sensor design	Sensor version	Filter	Special version
AFK-	**S** = spare sensor for exchangeable version AFK-A...	**K** = compact **R** = remote, standard cable length 1.5 m **S** = remote, special cable length "x" metre (specify in clear text) [1]	**00** = operating temperature range -40...+85 °C (standard) **0D** = pressure-proof 20 mbar...10 bar at -40...85°C **11** = ammonia resistant -40...85 °C **0V** = operating temperature range -40...85 °C sealing against vibrations **0E** = operating temperature range -50...150 °C (sensor design K only) **ED** = pressure-proof 20 mbar...10 bar at -50...150 °C **1E** = ammonia resistant -50...150 °C (duct version) **0H** = operating temperature range -80...200 °C (for remote version only) **HD** = operating temperature range -60...160 °C and admissible ambient pressure up to 25 bar (for remote version only) **FW** = module with fixed values of humidity and temperature	**3** = sintered metal filter of stainless steel AFZ-GE13 (standard), IP65 **4** = open filter of stainless steel AFZ-GE04 and PTFE protection, IP00 **6** = stainless steel filter with PTFE membrane AFZ-GE26, IP65 **8** = stainless steel filter with mounted PTFE filter AFZ-GE28 **9** = sintered filter made of fine-pored PTFE Ø 15 mm AFZ-GE29, IP65	**0** = none **Y** = special version (specify in clear text)

[1] in 0.5 m steps, for sensors with temperature range < -40 and > 85 °C the maximum length is 5 m

No responsibility taken for errors; subject to change without prior notice.
1/09 - 2026

Dimensions [mm]

AFK - A series

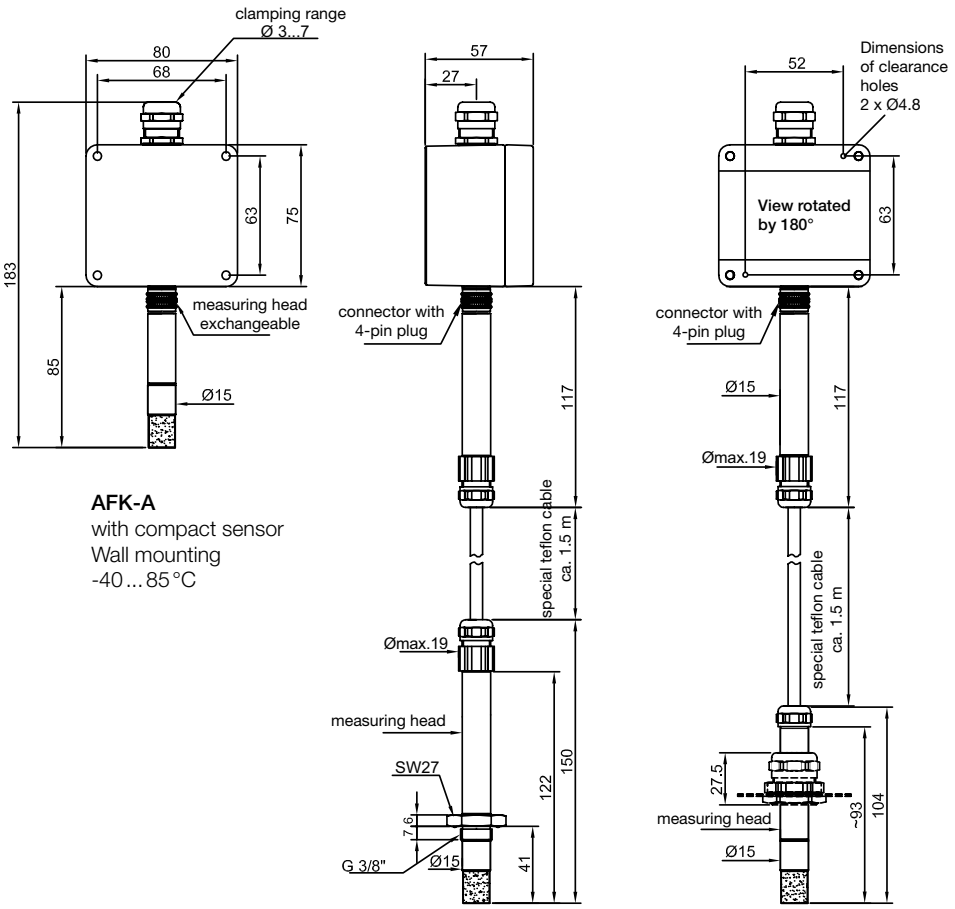

AFK-A
with compact sensor
Wall mounting
-40 ... 85 °C

AFK-A with remote sensor option HD
Sensor up to 160 °C
and 25 bar

AFK-A with remote sensor option 0H
Sensor up to +200°C

AFK-A with option 0E
Duct Version
up to +150°C

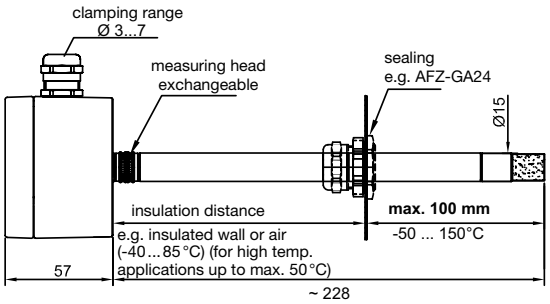

No responsibility taken for errors;
subject to change without prior notice.

Dimensions [mm]

AFK-F series

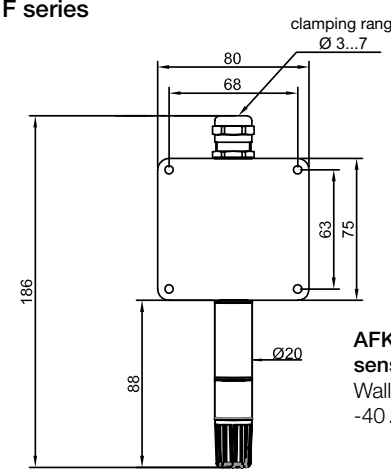

AFK-F with standard sensor
Wall Mounting
-40 ... 85 °C

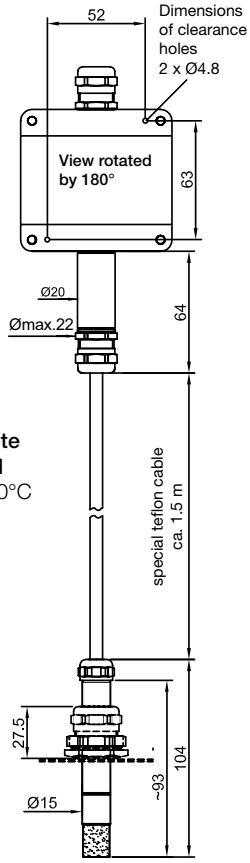

AFK-F with remote sensor option 0H
Sensor up to +200°C

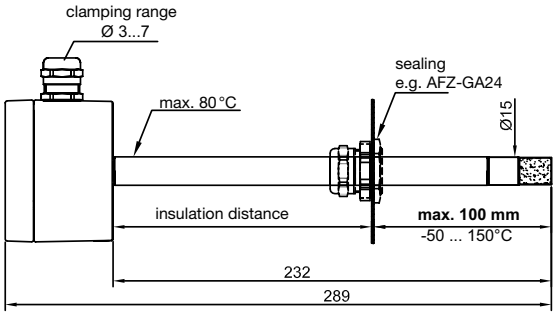

AFK-F with option 0E
Duct Version
up to 150 °C

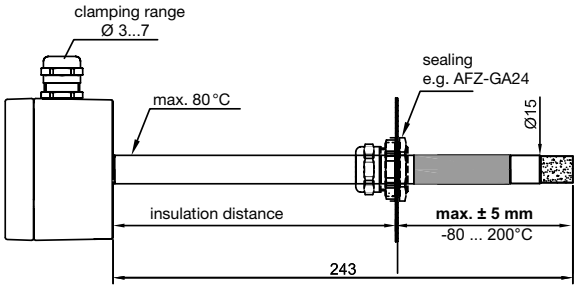

AFK-F with option TH
Duct Version
up to 200 °C

AFK-F with option KH
sensor presented in measuring position

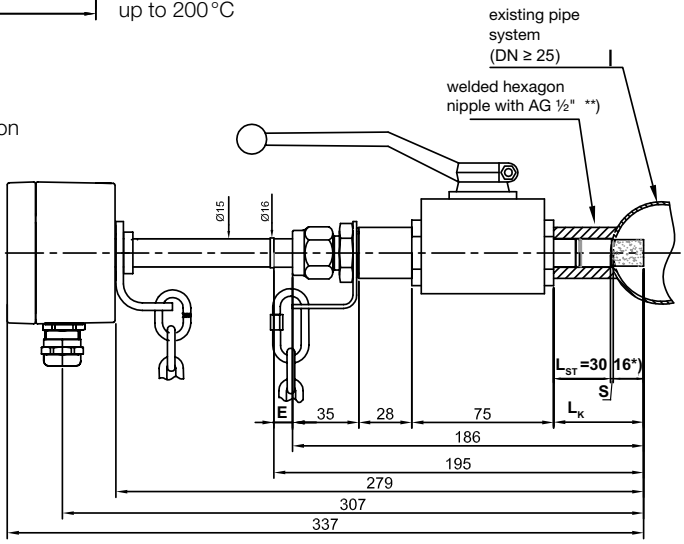

L_{ST}	Recommended length of the hexagon nipple 30 mm
L_K	Emersion length off the ball valve (measuring position)
S	Wall thickness of pipe
E	Setting length sensor tube $E_{measuring\ position}$ = 12 - s
*)	Recommended minimum immersion depth of the sensor tube = 16 mm
**)	Welded hexagon nipple with AG ½" is not scope of delivery! (Information drawing available on request)

No responsibility taken for errors;
subject to change without prior notice.

1/09 - 2026

Connection diagrams

4 ... 20 mA

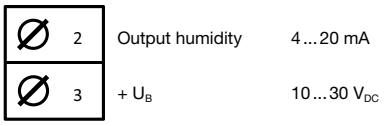

Output humidity	4 ... 20 mA
+ U_B	10 ... 30 V_{DC}

2 x 4 ... 20 mA

Output temperature	4 ... 20 mA
Output humidity	4 ... 20 mA
+ U_B	10 ... 30 V_{DC}

0 ... 1 V

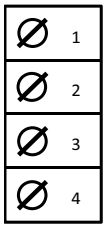

GND	
+ U_B 6 ... 30 V_{DC} or 6 ... 26 V_{AC}	
Output humidity	0 ... 1 V

2 x 0 ... 1 V

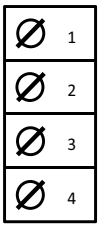

GND	
+ U_B 6 ... 30 V_{DC} or 6 ... 26 V_{AC}	
Output humidity	0 ... 1 V
Output temperature	0 ... 1 V

0 ... 10 V

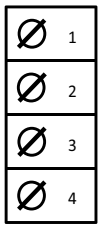

GND	
+ U_B 15 ... 30 V_{DC} or 13 ... 26 V_{AC}	
Output humidity	0 ... 10 V

2 x 0 ... 10 V

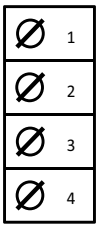

GND	
+ U_B 15 ... 30 V_{DC} or 13 ... 26 V_{AC}	
Output humidity	0 ... 10 V
Output temperature	0 ... 10 V

4 ... 20 mA and temperature passive

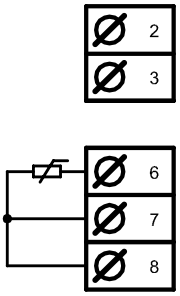

Output humidity	
+ U_B	
Output temperature, passive	

0 ... 10(1) V and temperature passive

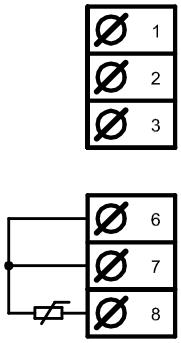

GND	
+ U_B	
Output humidity	
Output temperature, passive	

No responsibility taken for errors;
subject to change without prior notice.

Description

The products on this info sheet are used for adapting sensors to the different places of application.

Filters protect the sensor against mechanical damage resulting from particle bombardment at relatively high air speeds and damaging deposits. The filters also keep harmful gases from the sensor. Deposits of oil and grease on the filter lead to corrupted measurements which can be rectified by changing the filter.

User instructions

Filters, and in particular sintered filters, change the dynamic behaviour of the sensors. Wet filters yield corrupted measurements until they have dried out fully.

To avoid corrosion we recommend to treat the threads of filters AFZ-GE20 ... AFZ-GE22 slightly with acid-free grease.

Dimensions [mm]

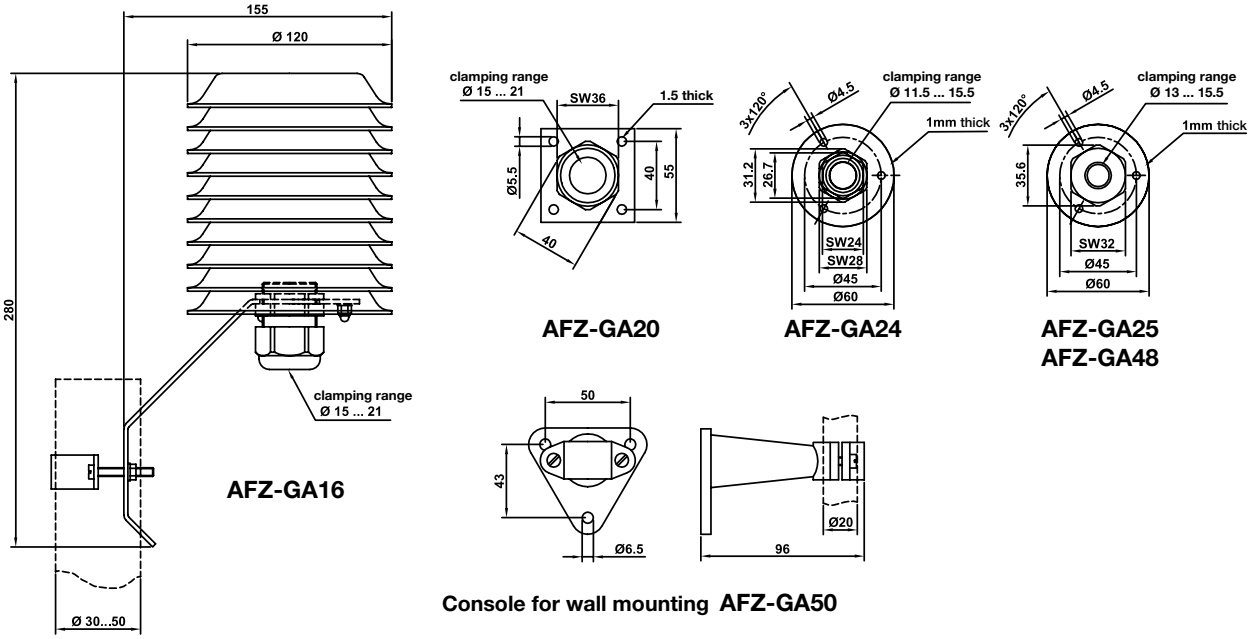

Console for wall mounting AFZ-GA50

No responsibility taken for errors;
subject to change without prior notice.

1/09 - 2026

Order Details Filter (for all sensor tubes Ø 15 mm)

Model	Code	Description	Response time Humidity at v = 1.5 m/s	Image
AFZ-G	E13	Coarse-pored sintered filter made of high-grade steel 1.4404 (max. pore size 100 µm). Protects the sensor element against high air speeds and dusty conditions. v up to approx. 20m/s. Ø 15 x 33, M 14x1, Operating temperature range: -80 ... 200 °C, IP 65	< 1.5 min	
	E04	Filter made of high-grade steel 1.4301, side openings, front open. Protection against mechanical impacts. Suitable for low air speed and clean atmosphere. Ø 15 x 39, M 14x1, Operating temperature range: -80 ... 200 °C, IP 10	20 s	
	E15	Filter made of high-grade steel 1.4301 with inserted filter gauze made of high-grade steel, mesh size approx. 0.11 mm. Protection against mechanical impacts and coarse dirt. Suitable for low air speed and clean atmosphere. Ø 15 x 39, M 14x1, Operating temperature range: -80 ... 200 °C, IP 40	< 1 min	
	E26	Filter made of high-grade steel 1.4301 with inserted filter gauze and membrane (nominal pore size 0.45 µm). Protects against aerosols and dust. v up to approx. 10m/s, Ø 15 x 39, M 14x1, Operating temperature range: -50 ... 150 °C (max. 1h 200 °C), IP 54	< 2 min	
	E28	High-grade steel filter with mounted E18 (filter made of sintered PTFE), average pore size approx. 20 µm, for sensor tubes Ø 15mm. For use in extreme conditions. Ø 20 x 37, M 14x1, Operating temperature range: -50 ... 200 °C, IP 65	< 3 min	
	E29	Sintered filter made of fine-pored PTFE, average pore size approx. 20 µm. For use in particularly demanding conditions. Meets the EMC directive for the AFK-A/AFK-F series, but not for the other sensors. Ø 15 x 39, M 14x1, Operating temperature range: -80 ... 200 °C, IP 65	< 3 min	
	E94	PTFE filter and E04 stainless steel filter, open. Operating temperature range: -80 ... 200 °C		-

Order Details Filter (for all sensor tubes Ø 20 mm)

Model	Code	Description	Response time Humidity at v = 1.5 m/s	Bild
AFZ-G	E16	Protective basket of PBT plastic, side openings, metallized finish. Protection against mechanical impacts, suitable for low air speed and clean, non-aggressive atmosphere. Ø 20 x 25, M 18x1, Operating temperature range: -40...85°C IP20	< 20 s	
	E17	Same as type E16, but with inserted filter gauze made of high-grade steel, mesh size approx. 0.11 mm. Protection against mechanical impacts and coarse dirt. Suitable for low air speed and clean, non-aggressive atmosphere. Ø 20 x 25, M 18x1, Operating temperature range: -40...85°C IP40	< 1 min	
	E18	Sintered filter made of fine-pored PTFE for use in extreme conditions, average pore size 20 µm. Meets the EMC directive for the I Series; but not for the other sensors. Ø 20 x 25, M 18x1, Operating temperature range: -80...200°C IP65	< 3 min	
	E20	PBT plastic filter, metallized, with inserted filter gauze (nominal pore size 0.45 µm), v up to approx. 10m/s. Protects against aerosols. Ø 20 x 25, M 18x1, Operating temperature range: -40...85°C IP54	< 1.5 min	
	E21	Fine-pored sintered filter made of high-grade steel 1.4404, v up to approx. 20m/s. Protects the sensor element against high air speeds and dusty conditions. Ø 20 x 25, M 18x1, Operating temperature range: -50...150°C IP65	< 1.5 min	
	E22	Same as type E21, but coarse-pored (max. pore size 100 µm) and dynamically faster, v up to approx. 20m/s. Ø 20 x 25, M 18x1, Operating temperature range: -50...150°C IP65	< 1.5 min	
	E9G	PTFE filter and protective plastic basket E16, open, conductive metallized finish, suitable for low air speed and clean, non-aggressive atmosphere. Operating temperature range: -40...80°C		-
	E97	PTFE filter and E17 light, plastic. PTFE filter for humidity sensing element and protective basket, non-metallised		-

No responsibility taken for errors;
subject to change without prior notice.

Order Details Filter for all sensors Ø 12 mm

Model	Code	Description	Response time Humidity at v = 1.5 m/s	Image
AFZ-G	E05	Sintered filter made of fine-pored PTFE with seal ring, IP65 - spare part	< 3 min	
	E07	Protective basket made of PC plastic, signal white, side openings, suitable for low air speed and clean atmosphere. Ø 12 x 33, M 10x0.75, operating temperature range: -40 ... 85 °C, IP 20	< 20 s	
	E08	Protective plastic basket with internal membrane - spare part	< 1.5 min	

Order Details Accessories for Humidity and Temperature Sensors and Hygrostats

Model	Code	Description	Image
AFZ-G	A50	Wall console, plastic, for mounting sensors Ø 20 mm, with mounting sleeve A57suitable for sensor tubes Ø 15 mm	
	A51	Fixing flange (oval) for duct mounting of AFH-G and AFS-G1, optional mounting device for easier sensor removal	
	A52	Fixing flange for AFB for sensors Ø 12 mm, with rubber sealing	
	A53	Protective tube, plastic for sensor types AFH-G and AFS-G1, recommended for protection against rain and sun in case of outdoor applications	
	A54	Protective tube made of gauze, recommended for air speeds between 8 and 15 m/s	
	A55	PTFE fi lter, two-part, for sensor types AFH-G and AFS-G1, recommended for extreme operating conditions	
	A56	Ventilated sensor tube with ventilating fan 24 V_{DC} for sensor types AFH-G und AFS-G1, for improved air flow	
	A57	Mounting sleeve for cable versions Ø 15 mm	-

Order Details Mounting Accessories

Model	Code	Description	Image
AFZ-G	A20	Mounting plate, suitable for mounting sensors Ø 20 mm in ventilation ducts up to 80 °C	
	A24	Mounting plate, suitable for mounting sensors Ø 15 mm in ventilation ducts up to 200 °C (stainless steel base plate with brass fitting)	
	A48	The same properties as AFZ-GA24, but suitable for sensors Ø 15 mm and Ø 20 mm	
	A25	Mounting plate, suitable for mounting sensors Ø 15 mm in ventilation ducts up to 100 °C, preferably for use in gases containing ammonia. (stainless steel base plate with stainless steel fitting)	
	A27	Pressure-tight feed-through fitting, thread G ½ x 12, brass, for sensors Ø 15 mm, pressure-tight up to 6 bar, suitable for temperatures up to 180 °C	
	A28	Pressure-tight feed-through fitting, thread G ¾ with locking ring, stainless steel, for sensors Ø 15 mm, pressure-tight up to 10 bar, suitable for temperatures up to 150 °C	
	A16	Weather guard for cable versions Ø 20 mm, recommended for protection against rain and sun in case of outdoor applications, with mounting sleeve A57 suitable for sensor tubes Ø 15 mm	

No responsibility taken for errors;
subject to change without prior notice.

1/09 - 2026