Coriolis Mass Flow Meter

For high pressure and hydrogen dispenser applications, up to 1000 bar

measuring • monitoring • analysing

TMU-W

- Outstanding accuracy
- Robustness against vibrations
- Working pressure up to 1000 bar
- Measuring ranges up to 960 kg/h
- OIML R139:2018 approval
- For hydrogen refuelling stations acc. to SAE J2601

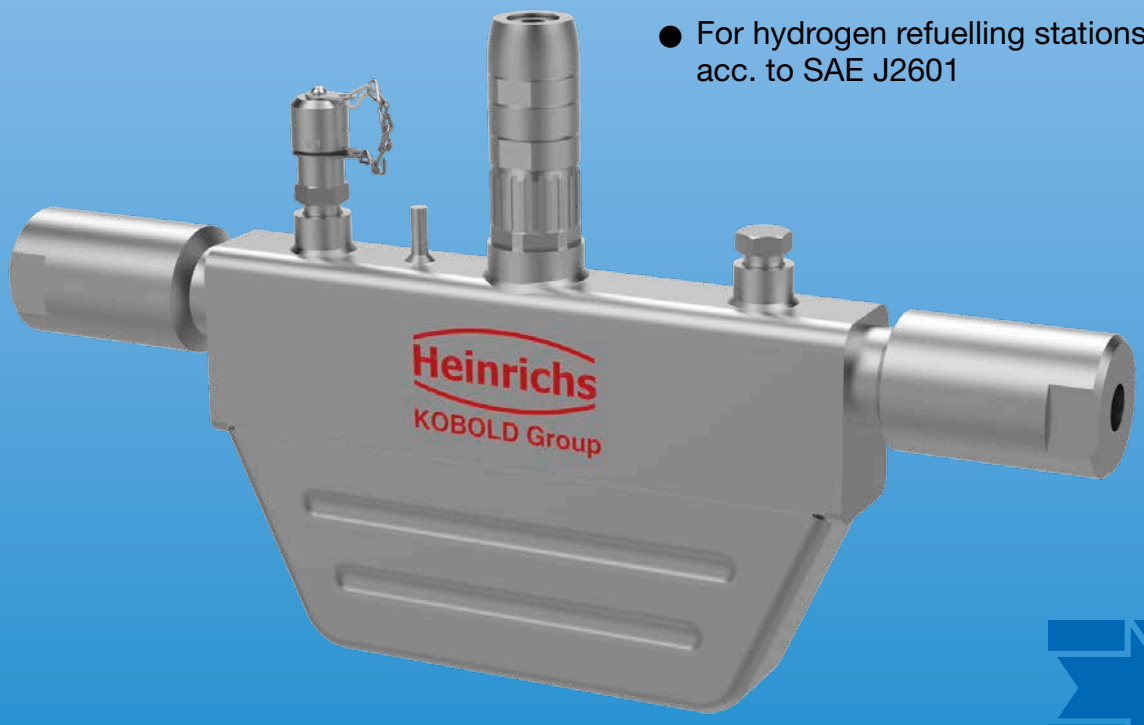

S5

KOBOLD companies worldwide:

AUSTRALIA, AUSTRIA, BELGIUM, BULGARIA, CANADA, CHINA, CZECHIA, FRANCE, GERMANY, GREAT BRITAIN, HUNGARY, INDIA, INDONESIA, ITALY, MALAYSIA, MEXICO, NETHERLANDS, PERU, POLAND, REPUBLIC OF KOREA, SPAIN, SWITZERLAND, THAILAND, TUNISIA, TURKEY, USA, VIETNAM

KOBOLD Messring GmbH
Nordring 22-24
D-65719 Hofheim/Ts.
Head Office:
+49(0)6192 299-0
+49(0)6192 23398
info.de@kobold.com
www.kobold.com

Function

The TMU-W product line was specially developed for hydrogen filling applications for dispensing stations.

During fuelling process, extremely high zero point and long term stability are required.

Its special design provides the highest possible stability and unrivalled measuring accuracy to the user.

Special materials and sophisticated engineering design methods such as FEM, CFD, FSI etc. were used to fulfil this task.

Optimized for use in slim hydrogen dispensers of the latest state-of-the-art generation.

Technical Details

Sensor system: TMU-W

Coriolis dual-pipe design

TMU-W004, TMU-W006

Accuracy

Liquid:	0.1 % of actual flowrate ± ZP stability
Gas:	0.5 % of actual flowrate ± ZP stability
OIML R139:2018:	Class 2 (only TMU-W004)
Wetted parts:	316TI/1.4571
Process connection:	6MF 9/16-18 UNF optional: ½" NPT (f), Hofer ⅞"
Sensor containment:	1.4301 stainless steel
Ambient temperature:	-40 °C…+80 °C -40 °F…+176 °F (acc. to OIML R139: -40°C…+55°C)
Process temperature:	-50 °C …+100 °C -58 °F…+212 °F (acc. to OIML R139: -40°C…+55°C)
Process pressure:	TMU-W004: max. 1000 bar TMU-W006: max. 500 bar
Ingress protection:	IP67 (EN 60529) / NEMA 6

Certificates and Approvals

ATEX / IECEx:	II 1/2G Ex ia IIC T2…T6 Ga/Gb
NEPSI:	Ex ia IIC T2…T6 Ga/Gb
OIML:	R139:2018

No responsibility taken for errors;
subject to change without prior notice.

1/10 - 2026

Available Transmitters UMC4 / UMC4-RM

Transmitter mounting:	Field housing Remote mounted via junction box (½"NPT(f), M20x1,5) or connector (Harting Han® R23). IP67 (EN60529) / NEMA6 Rack mount design (RM) remote via screw terminals. IP20 (to be mounted in min. IP54 ATEX certified protective cabinet)
Ambient temperature:	-20 °C … +60 °C (acc. to OIML R139: -40 °C … +55 °C)
Power supply:	90…265 V_{AC}, 50/60 Hz (not for OIML R139) 19…36 V_{DC}

Outputs:

Each output circuit is galvanically isolated from each other as well as to ground.

Analogue:	1x 4…20 mA, passive, with HART® 1x 4…20 mA, passive Mass flow, volume flow, temperature.
Binary:	passive via optocoupler Pulse duration: 50 ms adjustable range 0,1…2000 ms
Status:	passive via optocoupler Forward-/Reverse, MIN/MAX flow rate, MIN/MAX temperature, alarm, second pulse output (phase shifted to pulse 1 by 90°).

Certificate and Approvals for UMC4 / UMC4-RM





Field housing:

ATEX / IECEx:	II (1)2G Ex d [ia Ga] IIC T4-T3 Gb
NEPSI:	Ex db [ia Ga] IIC T4/T3 Gb
Terminal compartment:	Ex d

Type of protection signal output:
- Ex [ia Ga] intrinsically safe
- non-intrinsically safe

Rack mount design (RM):

ATEX / IECEx: II (1)3G Ex ec [ia Ga] IIC T6..T3 Gc

(to be mounted in min. IP54 ATEX certified protective cabinet)

Type of protection signal output:
- Ex [ia Ga] intrinsically safe
- non-intrinsically safe

Measuring ranges:

TMU-W004:	max. 4 kg/min H_2 (P_{nom} 1000 bar), with OIML R139:2018 approval
TMU-W006:	max. 16 kg/min H_2 (P_{nom} 500 bar)

No responsibility taken for errors;
subject to change without prior notice.

Necessary data for the sizing of the meter

Medium:				
	Nominal	Minimum	Maximum	Unit
Flow rate:				
Process pressure ☐ **abs. / ☐ gauge.**				
Process temperature:				
Density: (at process condition)				
Viscosity: (at process condition)				

Order Details Sensor (Example: **TMU-W004 6010 A 00 K 0 1 0 0 K**)

Model	Wetted materials / Measuring range / P_{Nom}	Process connection / Installation length / P_{Nom}	Sensor containment
TMU-	**W004** = Stainless steel 316Tl / 14571 / 4 kg/min H_2 / 1000 bar	**6010** = ¼" NPT (f) / 347 mm / 500 bar **6030** = ½" NPT (f) / 347 mm / 500 bar **4550** = Hofer 7/8" / 347 mm / 500 bar **4500** = 6MF 9/16-18 UNF / 347 mm / 1000 bar **XXXX**= Special, customer specified	**A** = Stainless steel (1.4301) Overpressure blow out, N_2 filling nozzle, N_2 filled
	W006 = Stainless steel 316Tl / 14571 / 16 kg/min H_2 / 500 bar [2]	**6010** = ¼" NPT (f) / 400 mm / 500 bar **6030** = ½" NPT (f) / 400 mm / 500 bar **4550** = Hofer 7/8" / 400 mm / 500 bar **4500** = 6MF 9/16-18 UNF / 400 mm / 500 bar **XXXX**= Special, customer specified	

Heating / Cooling	Transmitter mounting / Process temperature / Electrical connection	Approvals
00 = without	**K** = Remote mounted transmitter (IP67) / -50…100 °C (-58…212 °F) / Connector (Harting Han® R 23) **X** = Special, customer specified	**0** = without **L** = ATEX / IECEx / UKCA II 1/2G Ex ia IIC T2...T6 Ga/Gb **B** = NEPSI Ex ia IIC T2…T6 Ga/Gb

Calibration flow	Calibration density	Supplementary equipment / Design
1 = Standard, 3-point **3** = External lab **7** = OIML R139:2018. Hydrogen [1] **X** = Special, customer specified	**0** = without	**0H** = without **1H** = Certificate of compliance with the order 2.1 **2H** = Test report 2.2 **BH** = Inspection certificate 3.1 with material certificate (DIN EN 10204:2004) **XH** = Special, customer specified

[1] Must be used with approved UMC4 transmitter for system approval.
[2] Not for OIML R139:2018. Hydrogen.

No responsibility taken for errors; subject to change without prior notice.
1/10 - 2026

Order Details Transmitter (Example: **UMC4-E11A00K**)

Model	Mounting / Conduit port opening	Display / interface board	Power supply
UMC4-	**E** = remote mount, IP68, without connection box , Transmitter with 5 m cable / M20 x 1,5 [1] **D** = remote mount, IP68, with connection box / M20 x 1,5 [1] **F** = remote mount, IP00, via screw terminals, rack mount version / without	**1** = Integral within transmitter housing, for ambient temperature up to 60 °C	**1** = 90…265 V_{AC}, 50/60 Hz [3] [4] **2** = 19…36 V_{DC}, 24 V_{AC} (+5%…-20%), 50/60 Hz

Outputs	Approvals	Type of protection (signal output)	Design
A = Analogue output 1: 4 … 20 mA with HART® Analogue output 2: 4 … 20 mA Pulse output: passive, U_m = 30 V_{DC} Status output: passive, U_m = 30 V_{DC} **M**[6]= Modbus Modbus (RTU via RS485)	**0** = without **2** = ATEX, IECEx II (1)2G Ex d [ia Ga] IIC T4-T3 Gb NEPSI Ex db [ia Ga] IIC T4/T3 Gb terminal compartment Ex d / -20…60 °C [3] **3** = ATEX, IECEx II (1)3G Ex ec [ia Ga] IIC T6..T3 Gc Rack mount design / -20…55 °C [2]	**0** = Without Approval [5] **1** = Intrinsically safe Ex [ia Ga] **2** = Not intrinsically safe	**K** = Kobold

In the table are only options listed, which are relevant for the use of the UMC4 transmitter with a TMU-W sensor.

[1] Includes mounting bracket for wall and 2" pipe.
[2] Only for option F
[3] Not for option F
[4] Not for OIML R139:2018 (TMU-W)
[5] Only for approval "0"
[6] not Ex, only in combination with approval “0”, not with option F

Dimensions [mm]

TMU-W004

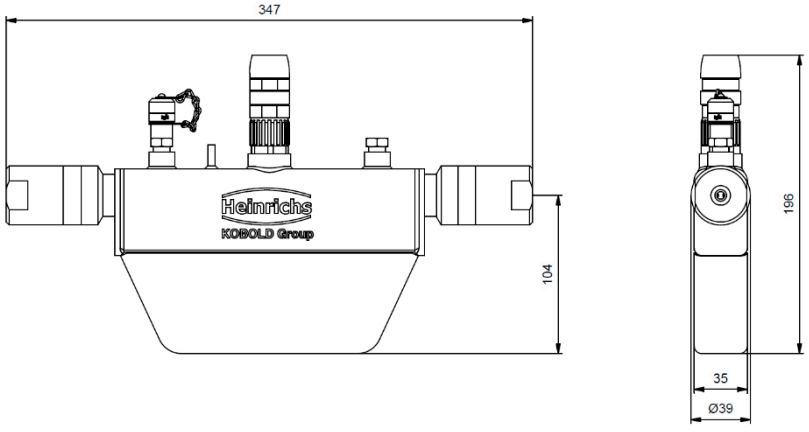

No responsibility taken for errors;
subject to change without prior notice.

Dimensions [mm] (continued)

TMU-W006

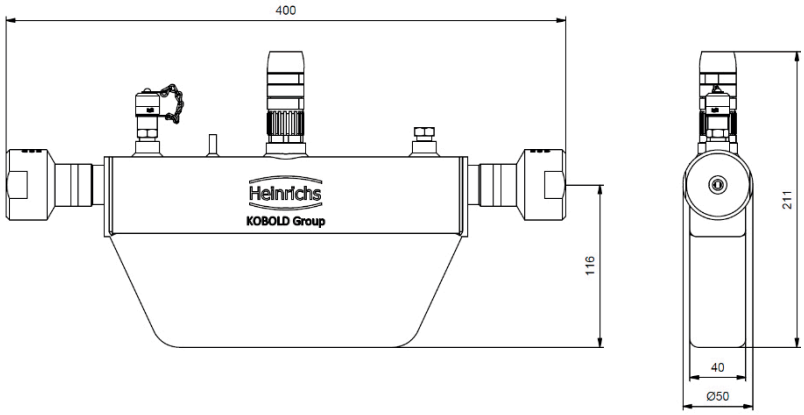

UMC4 (Field housing)

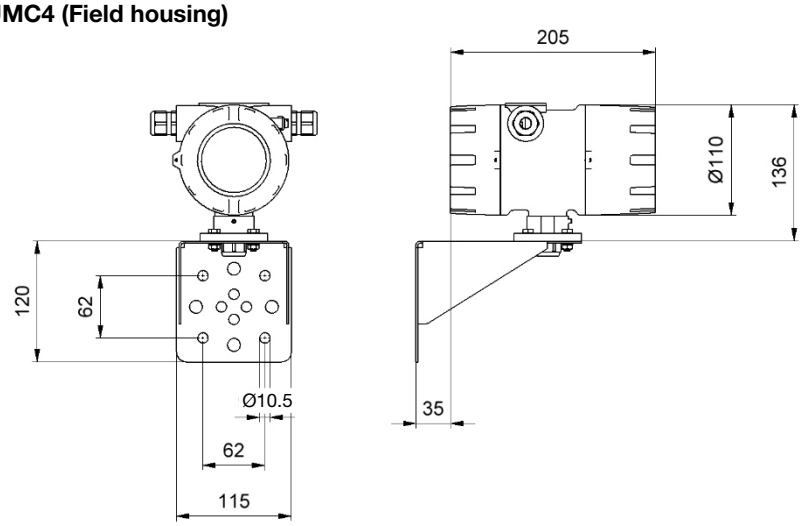

UMC4-RM (Rack mount design)

